LCD TV 250W Main Board Circuit

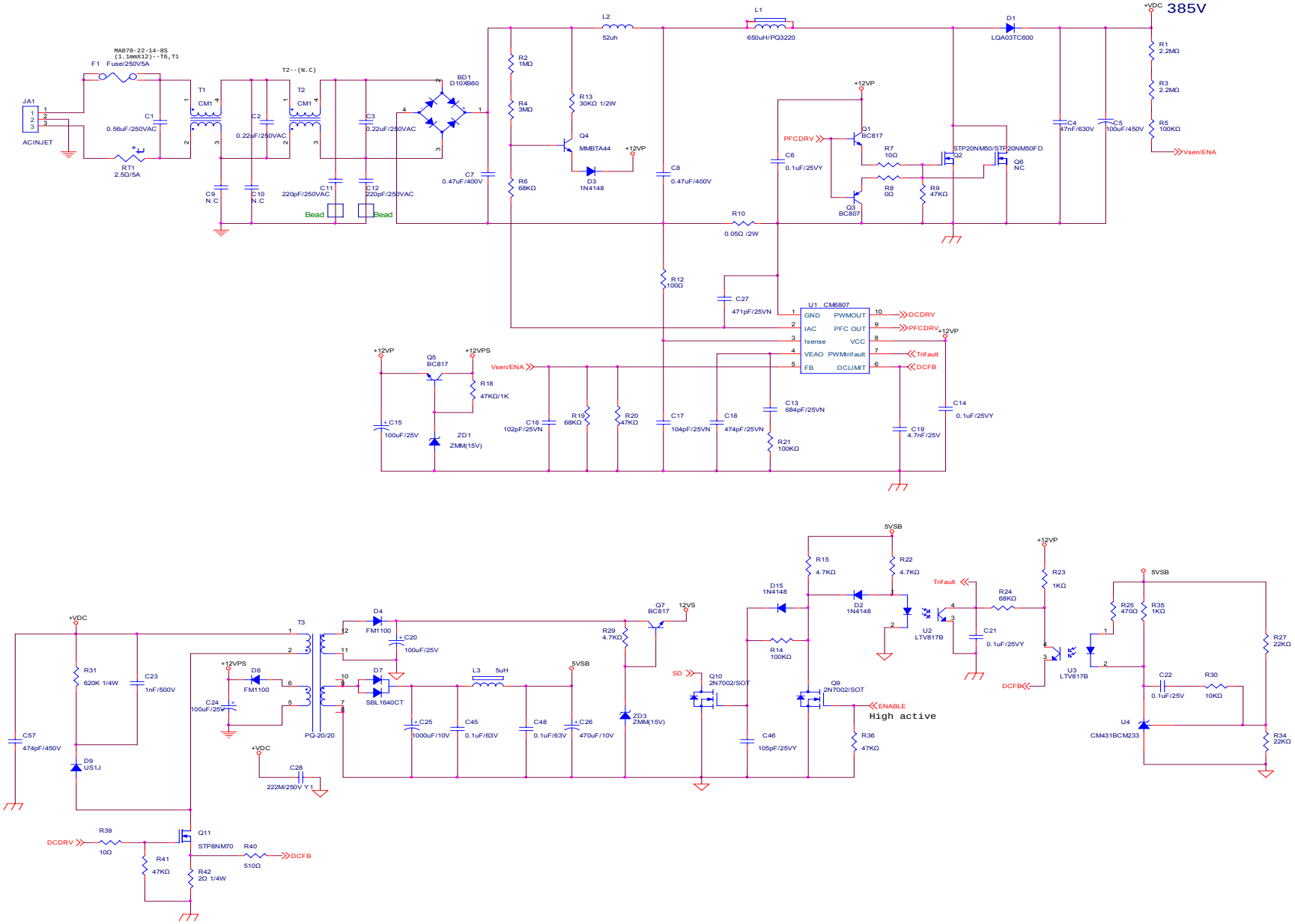

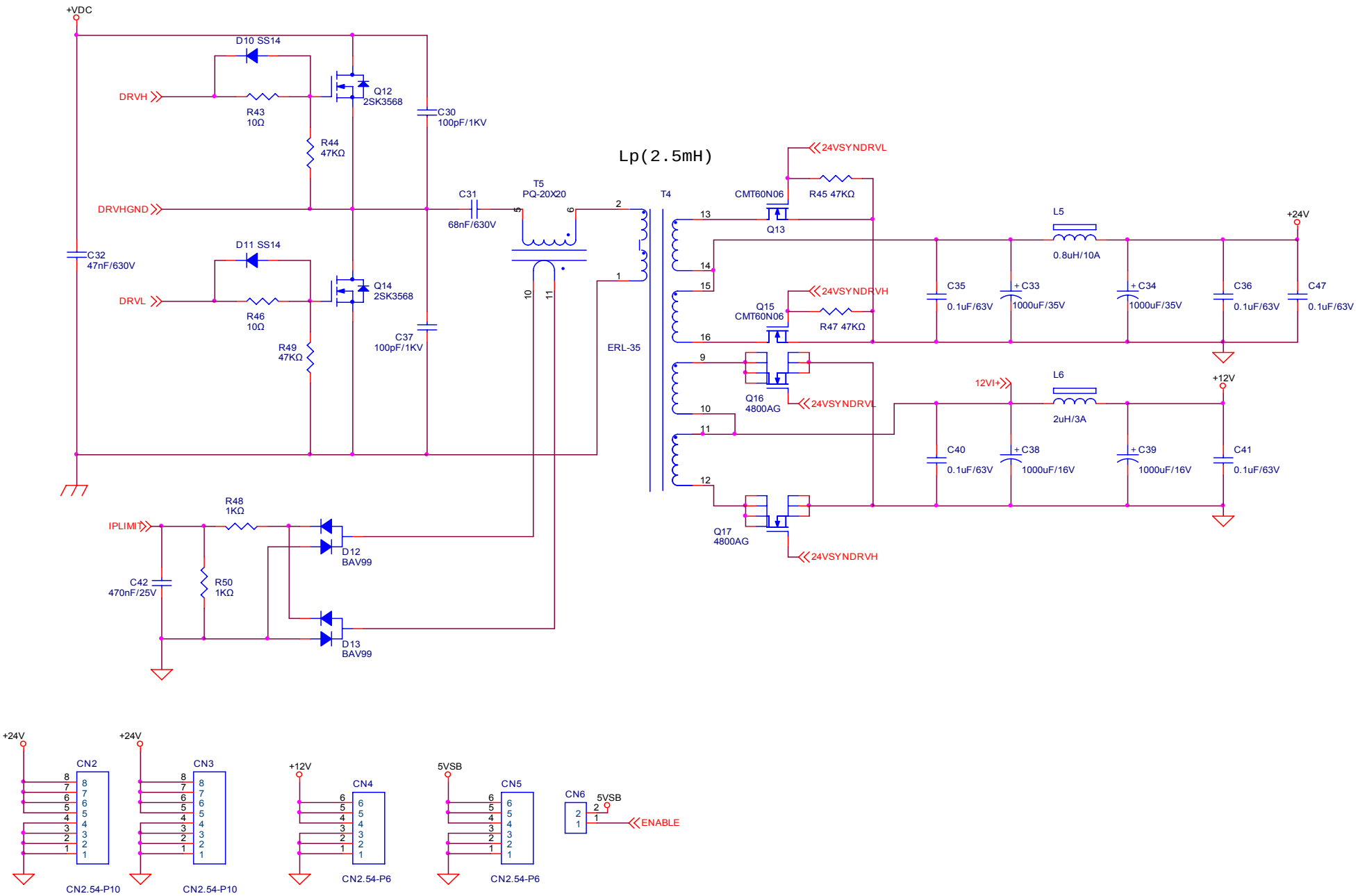
+VDC
D10 SS14
DRVH
R43
10Ω
Q12
2SK3568
C30
100pF/1KV
R44
47KΩ
DRVHGND
C31
68nF/630V
T5
PQ-20X20
Lp(2.5mH)
T4
24VSYNDRVL
CMT60N06
R45 47KΩ
Q13
L5
0.8uH/10A
+24V
C32
47nF/630V
D11 SS14
DRVL
R46
10Ω
Q14
2SK3568
C37
100pF/1KV
R49
47KΩ
ERL-35
24VSYNDRVH
Q15
CMT60N06
R47 47KΩ
C35
0.1uF/63V
C33
1000uF/35V
C34
1000uF/35V
C36
0.1uF/63V
C47
0.1uF/63V
Q16
4800AG
24VSYNDRVL
12VI+
L6
2uH/3A
+12V
C40
0.1uF/63V
C38
1000uF/16V
C39
1000uF/16V
C41
0.1uF/63V
Q17
4800AG
24VSYNDRVH
R48
1KΩ
IPLIMIT
D12
BAV99
C42
470nF/25V
R50
1KΩ
D13
BAV99
+24V
CN2
CN2.54-P10
+24V
CN3
CN2.54-P10
+12V
CN4
CN2.54-P6
5VSB
CN5
CN2.54-P6
CN6
5VSB
ENABLE

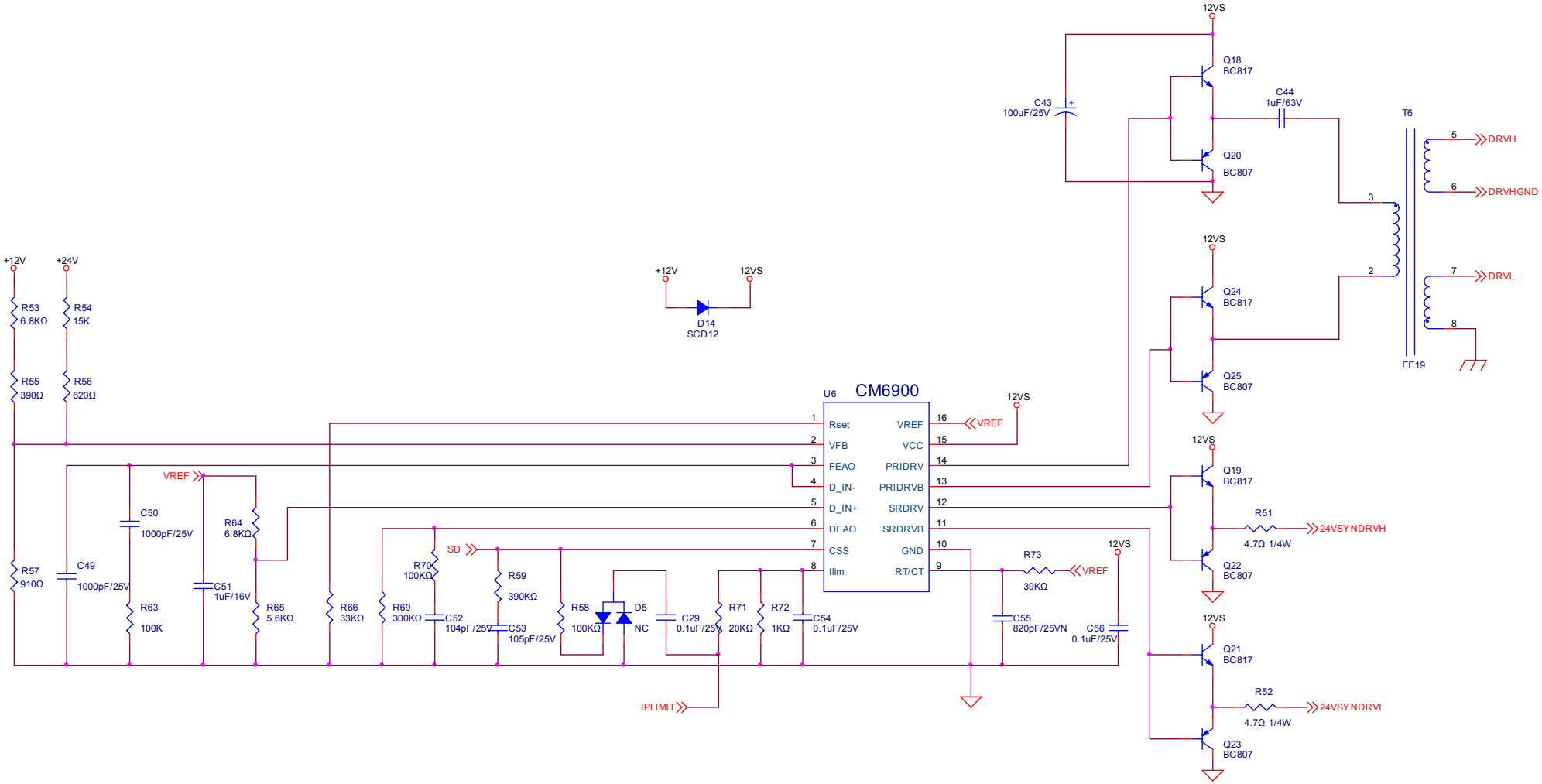
+12V
+24V
R53
6.8KΩ
R54
15K
R55
390Ω
R56
620Ω
R57
910Ω
C49
1000pF/25V
C50
1000pF/25V
R63
100K
VREF
C51
1uF/16V
R64
6.8KΩ
R65
5.6KΩ
R66
33KΩ
R69
300KΩ
R70
100KΩ
C52
104pF/25V
SD
R59
390KΩ
C53
105pF/25V
R58
100KΩ
D5
NC
C29
0.1uF/25V
IPLIMIT
R71
20KΩ
R72
1KΩ
C54
0.1uF/25V
+12V
12VS
D14
SCD12
U6
CM6900
Rset
VFB
FEAO
D_IN-
D_IN+
DEAO
CSS
Ilim
VREF
VCC
PRIDRV
PRIDRVB
SRDRV
SRDRVB
GND
RT/CT
12VS
R73
39KΩ
C55
820pF/25VN
C56
0.1uF/25V
C43
100uF/25V
Q18
BC817
Q20
BC807
C44
1uF/63V
T6
EE19
DRVH
DRVHGND
DRVL
Q24
BC817
Q25
BC807
Q19
BC817
R51
4.7Ω 1/4W
24VSYNDRVH
Q22
BC807
Q21
BC817
R52
4.7Ω 1/4W
24VSYNDRVL
Q23
BC807