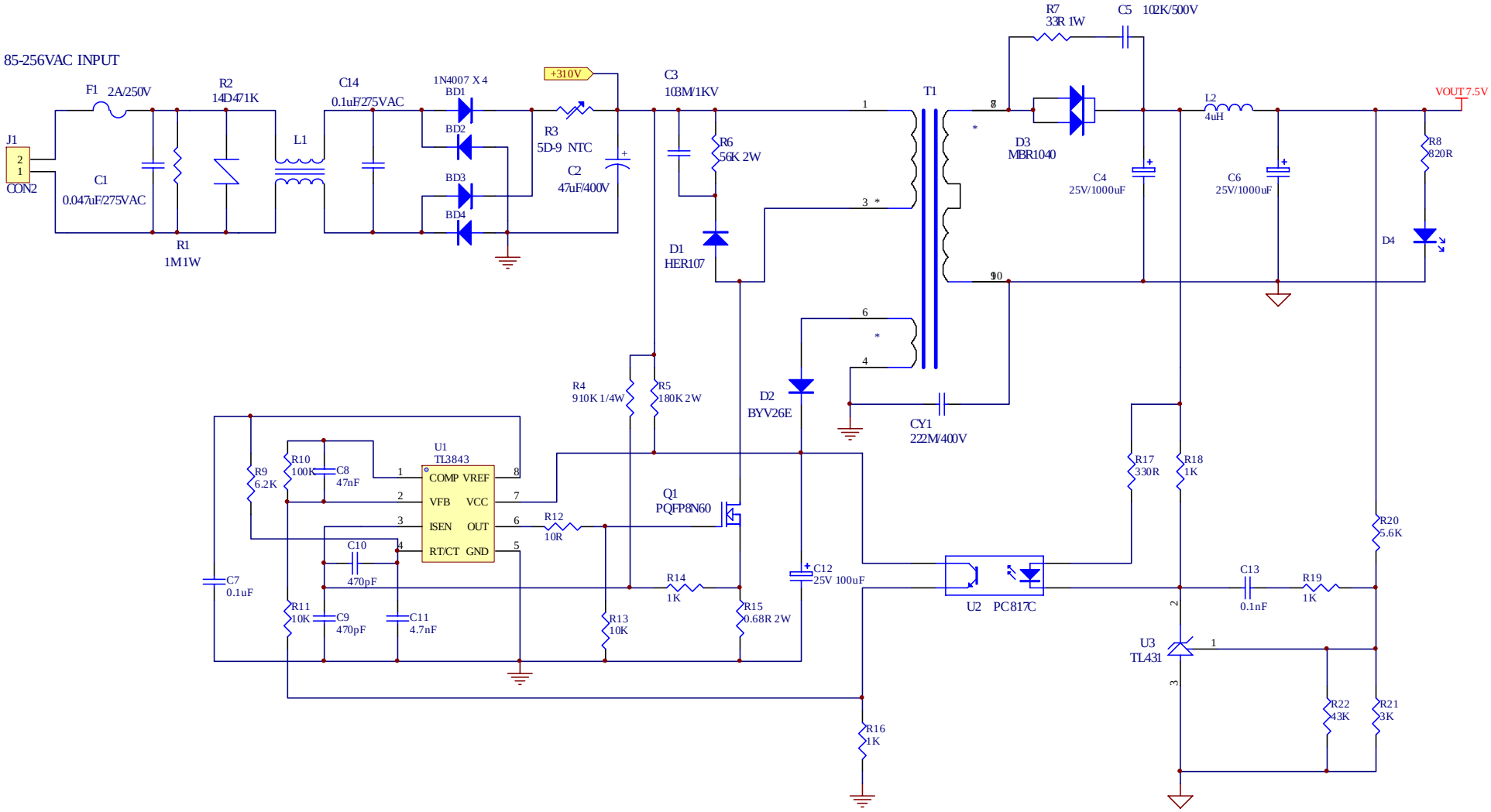
85-256VAC INPUT
J1
CON2
F1 2A/250V
C1
0.047uF/275VAC
R1
1M1W
R2
14D471K
L1
C14
0.1uF/275VAC
1N4007 X 4
BD1
BD2
BD3
BD4
+310V
R3
5D-9 NTC
C2
47uF/400V
C3
103M/1KV
R6
56K 2W
D1
HER107
T1
R7
33R 1W
C5 102K/500V
D3
MBR1040
C4
25V/1000uF
L2
4uH
C6
25V/1000uF
VOUT 7.5V
R8
820R
D4
R4
910K 1/4W
R5
180K 2W
D2
BYV26E
CY1
222M/400V
U1
TL3843
COMP VREF
VFB VCC
ISEN OUT
RT/CT GND
R9
6.2K
R10
100K
C8
47nF
C10
470pF
C7
0.1uF
R11
10K
C9
470pF
C11
4.7nF
R12
10R
Q1
PQFP8N60
R14
1K
R13
10K
R15
0.68R 2W
C12
25V 100uF
R16
1K
U2 PC817C
R17
330R
R18
1K
C13
0.1nF
R19
1K
R20
5.6K
U3
TL431
R22
43K
R21
3K