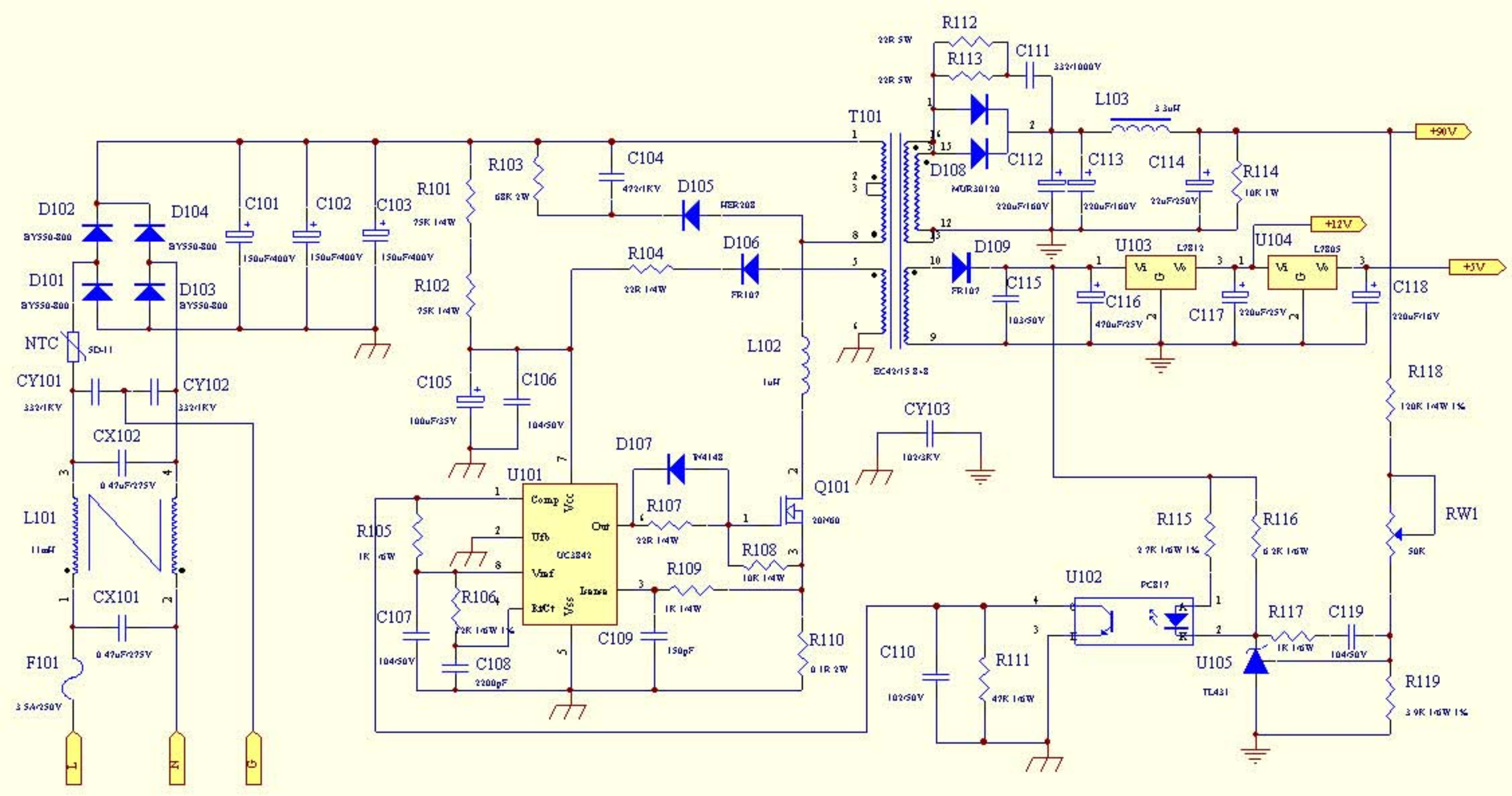
R112
22R 5W
R113
22R 5W
C111
332/1000V
L103
3.3uH
T101
D108
MUR30120
C112
C113
C114
R114
10K 1W
+90V
D102
BYS50-800
D104
BYS50-800
C101
150uF/400V
C102
150uF/400V
C103
150uF/400V
R101
75K 1/4W
R103
68K 2W
C104
472/1KV
D105
HER208
D101
BYS50-800
D103
BYS50-800
R102
75K 1/4W
R104
22R 1/4W
D106
FR107
D109
FR107
C115
103/50V
U103
L7812
U104
L7805
+12V
+5V
C116
470uF/25V
C117
220uF/25V
C118
220uF/16V
NTC
SD-11
CY101
332/1KV
CY102
332/1KV
C105
100uF/25V
C106
104/50V
L102
1uH
EC42/15 8+8
CY103
102/3KV
CX102
0.47uF/275V
D107
IN4148
U101
UC3842
Comp
Vcc
Out
Ufb
Vref
Isense
RtCt
Vss
Q101
20N60
R107
22R 1/4W
R108
10K 1/4W
R109
1K 1/4W
R105
1K 1/6W
R106
72K 1/6W 1%
C107
104/50V
C108
2200pF
C109
150pF
R110
0.1R 2W
L101
11mH
CX101
0.47uF/275V
F101
3.5A/250V
L
N
G
R115
2.7K 1/6W 1%
R116
6.2K 1/6W
RW1
50K
U102
PC817
C110
102/50V
R111
47K 1/6W
R117
1K 1/6W
C119
104/50V
U105
TL431
R118
120K 1/4W 1%
R119
3.9K 1/6W 1%