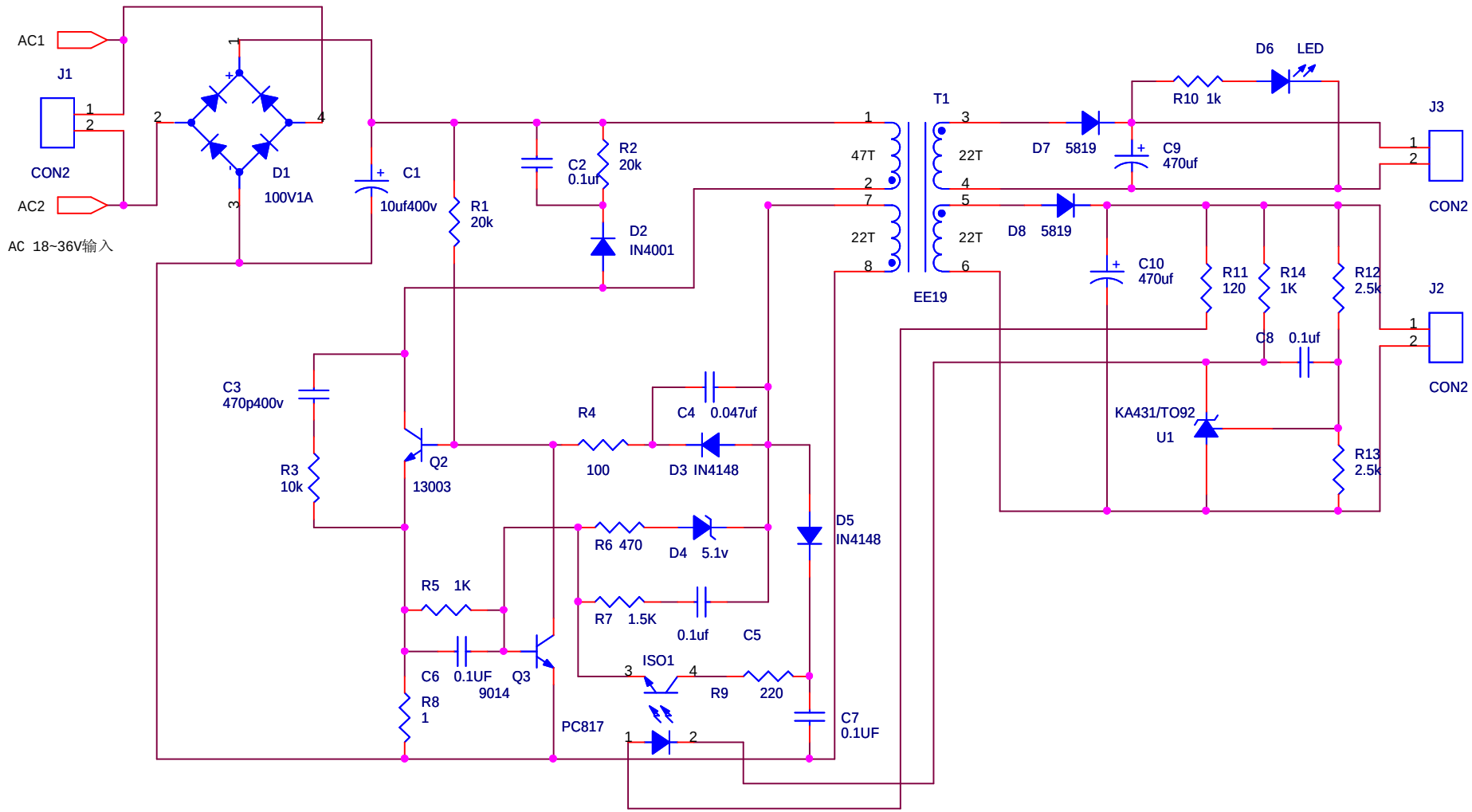

Title	<Title>	
Size A	Document Number <Doc>	Rev <RevCo
Date: Friday, March 14, 2008	Sheet 1 of 1	