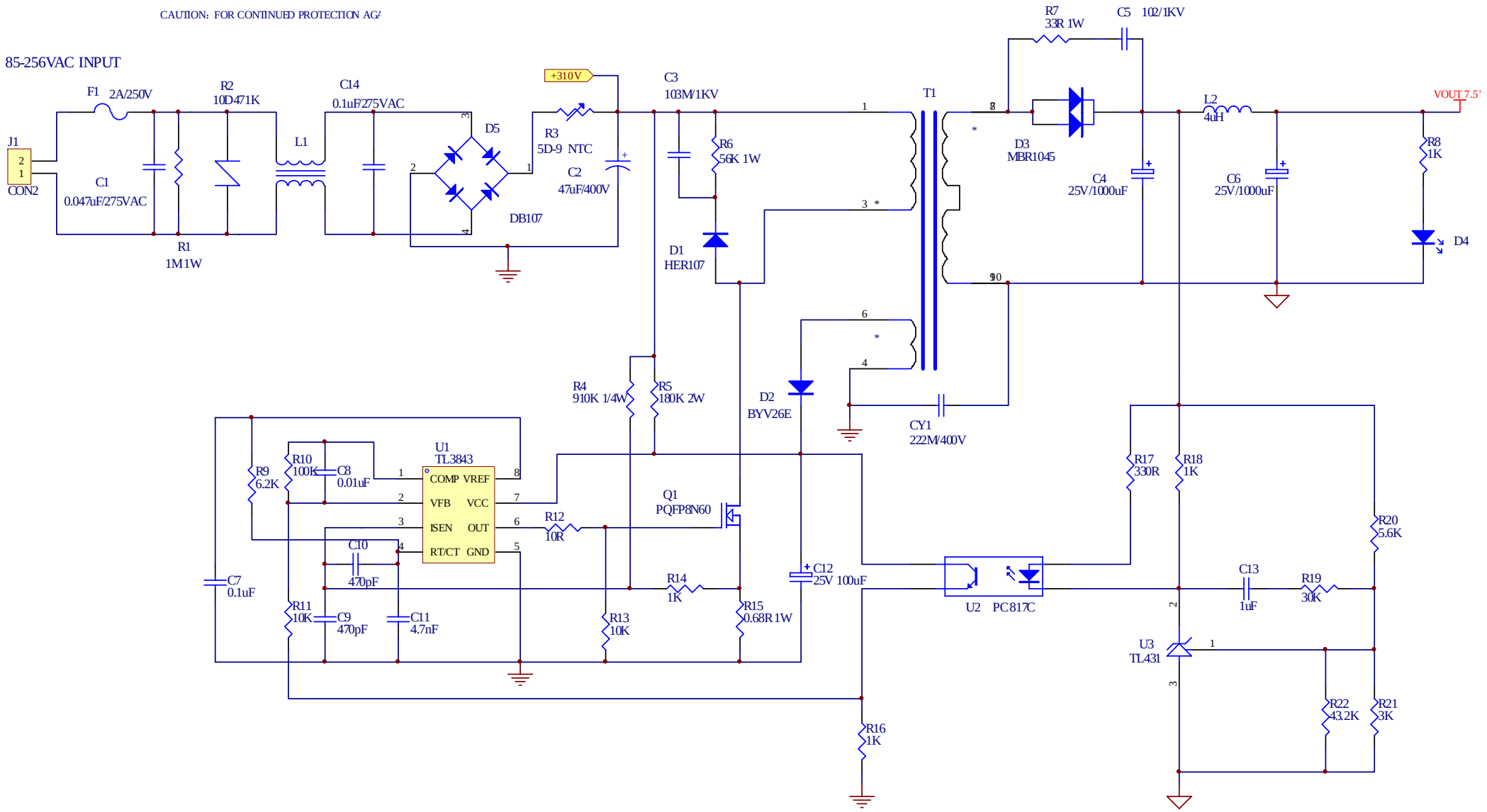
CAUTION: FOR CONTINUED PROTECTION AGA
85-256VAC INPUT
J1
CON2
F1 2A/250V
C1 0.047uF/275VAC
R1 1M1W
R2 10D471K
L1
C14 0.1uF/275VAC
D5
DB107
R3 5D-9 NTC
+310V
C2 47uF/400V
C3 103M/1KV
R6 56K 1W
D1 HER107
T1
R7 33R 1W
C5 102/1KV
D3 MBR1045
C4 25V/1000uF
L2 4uH
C6 25V/1000uF
VOUT 7.5'
R8 1K
D4
R4 910K 1/4W
R5 180K 2W
D2 BYV26E
CY1 222M/400V
U1 TL3843
COMP VREF
VFB VCC
ISEN OUT
RT/CT GND
R9 6.2K
R10 100K
C8 0.01uF
C10 470pF
C7 0.1uF
R11 10K
C9 470pF
C11 4.7nF
R12 10R
Q1 PQFP8N60
R14 1K
R13 10K
R15 0.68R 1W
C12 25V 100uF
R16 1K
U2 PC817C
R17 330R
R18 1K
C13 1uF
R19 30K
R20 5.6K
U3 TL431
R22 43.2K
R21 3K