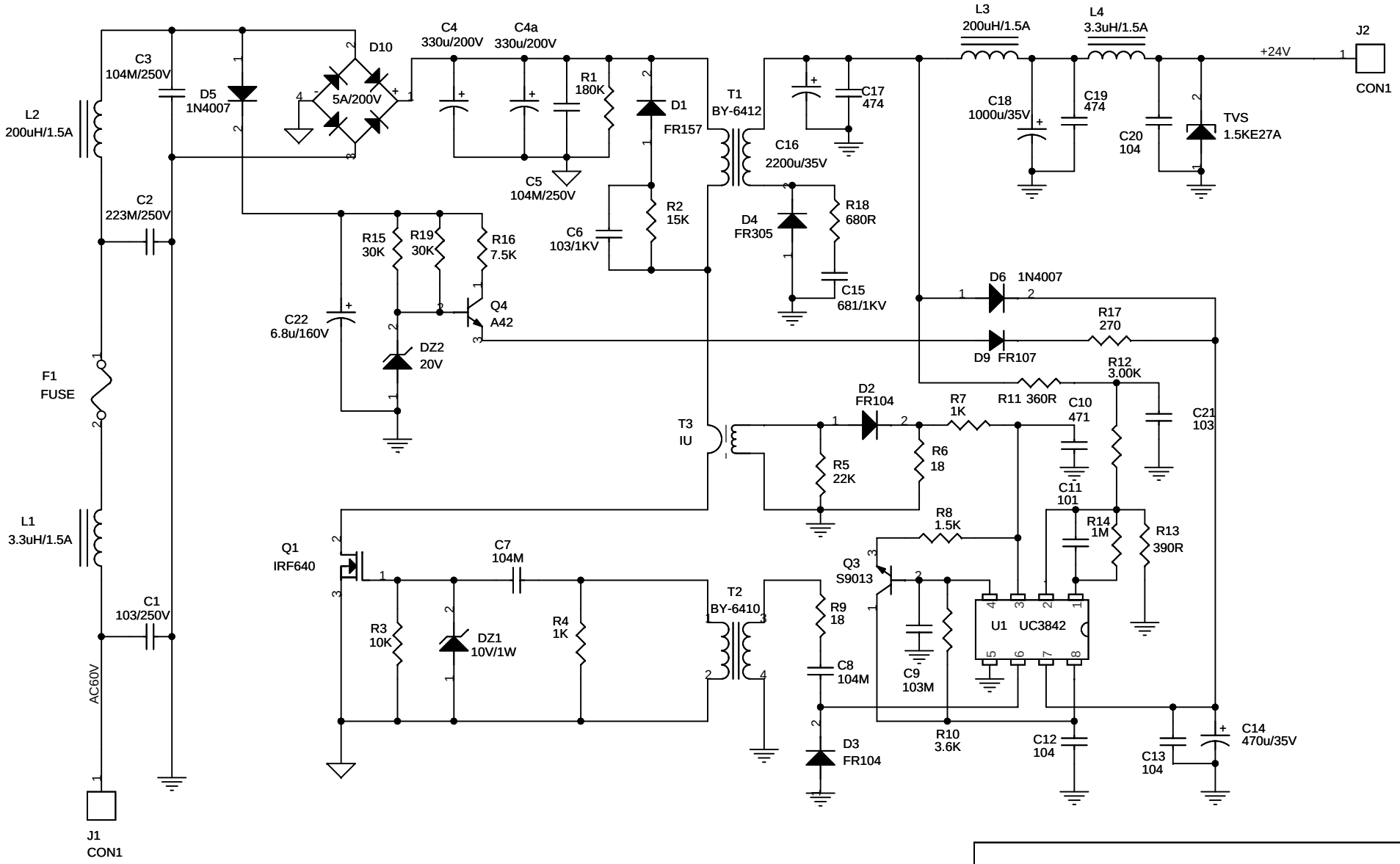

Title	<Title> 60224开关电源		
Size A4	Document Number <Doc>		Rev <RevCo
Date: Monday, January 07, 2008	Sheet 1 of 1		