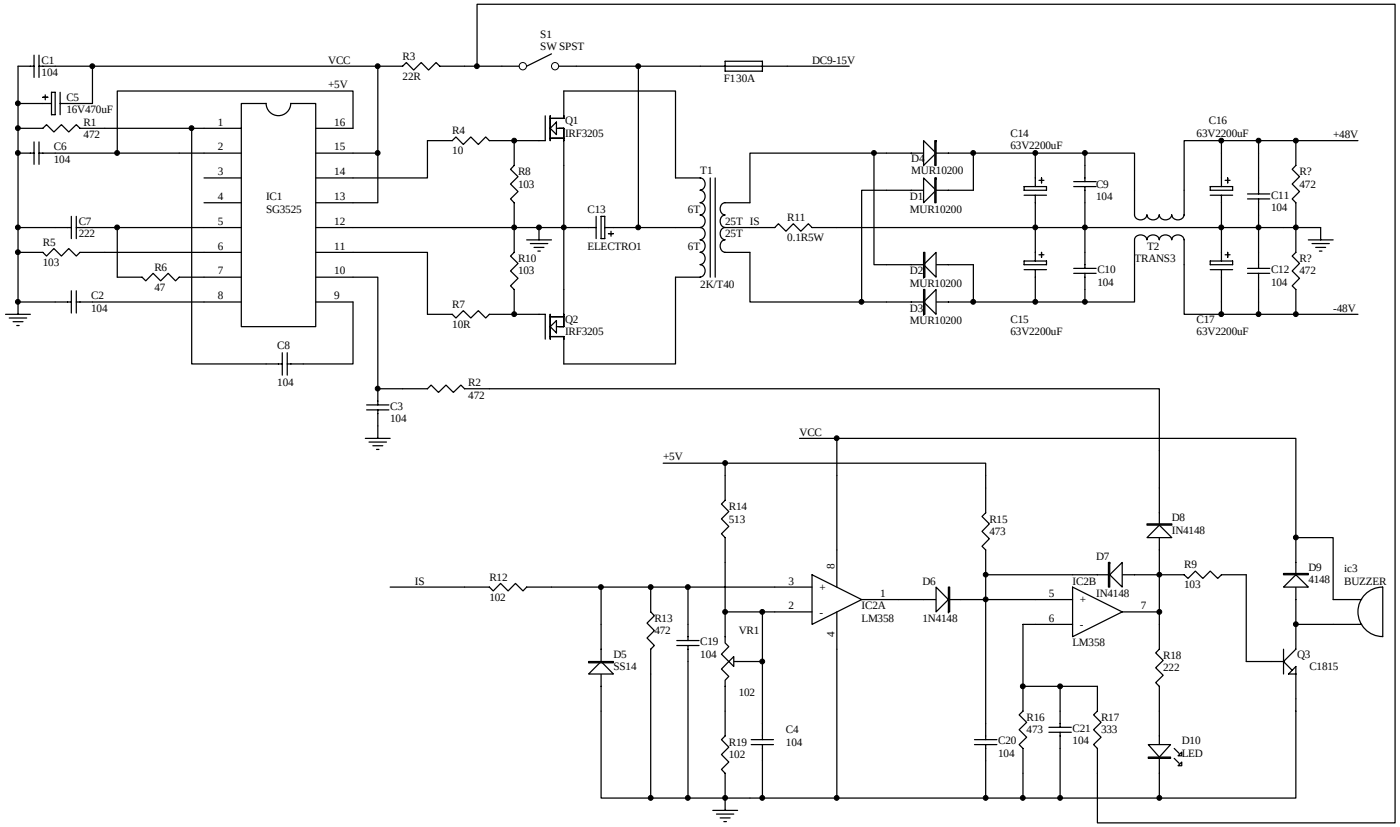

Title		
Size B	Number	Revision
Date: 16-May-2008		Sheet of
File: D:\power\MyDesignSINEAC.ddb		Drawn By: