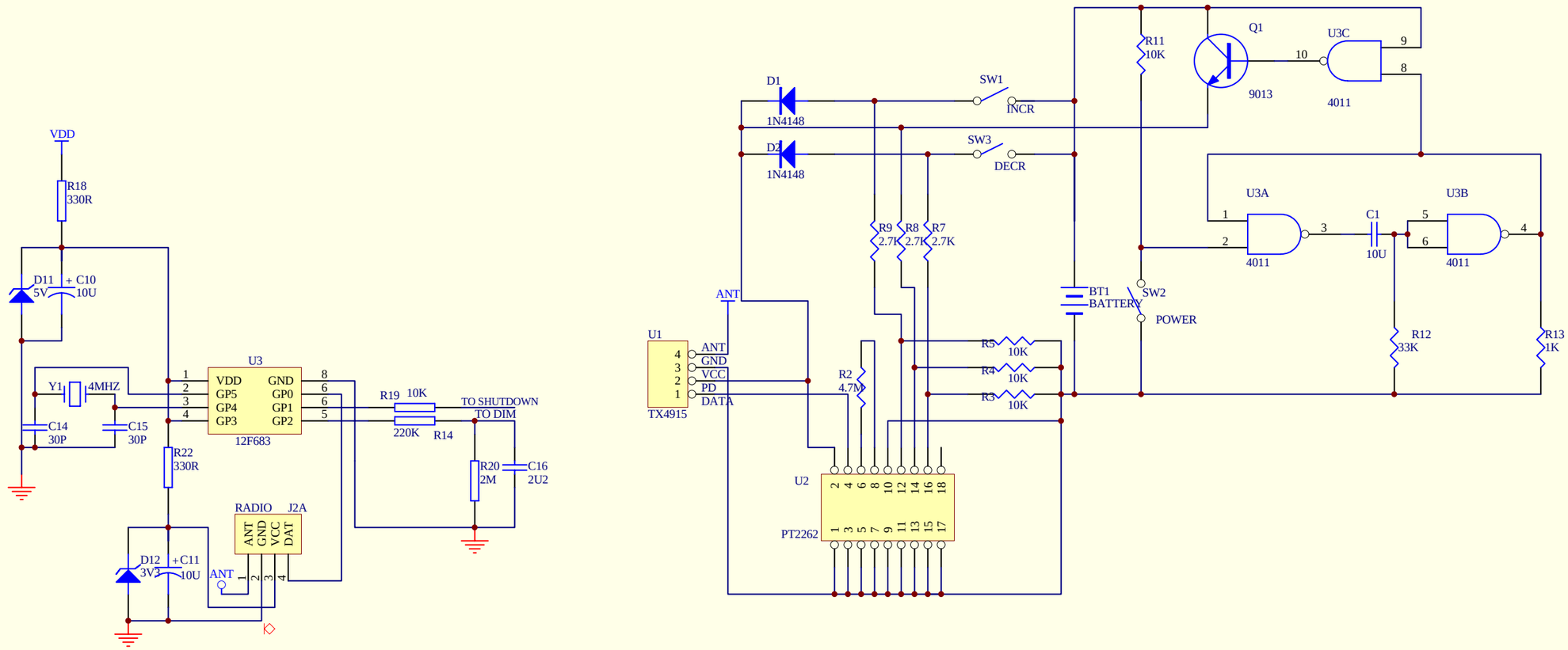

Title		
Size B	Number	Revision
Date: 29-Jan-2007	Sheet of	
File: C:\Documents and Settings\Jack Wang\My Documents\my job\PT6901\ptc_logo\新建文件夹\E	Drawn By:	