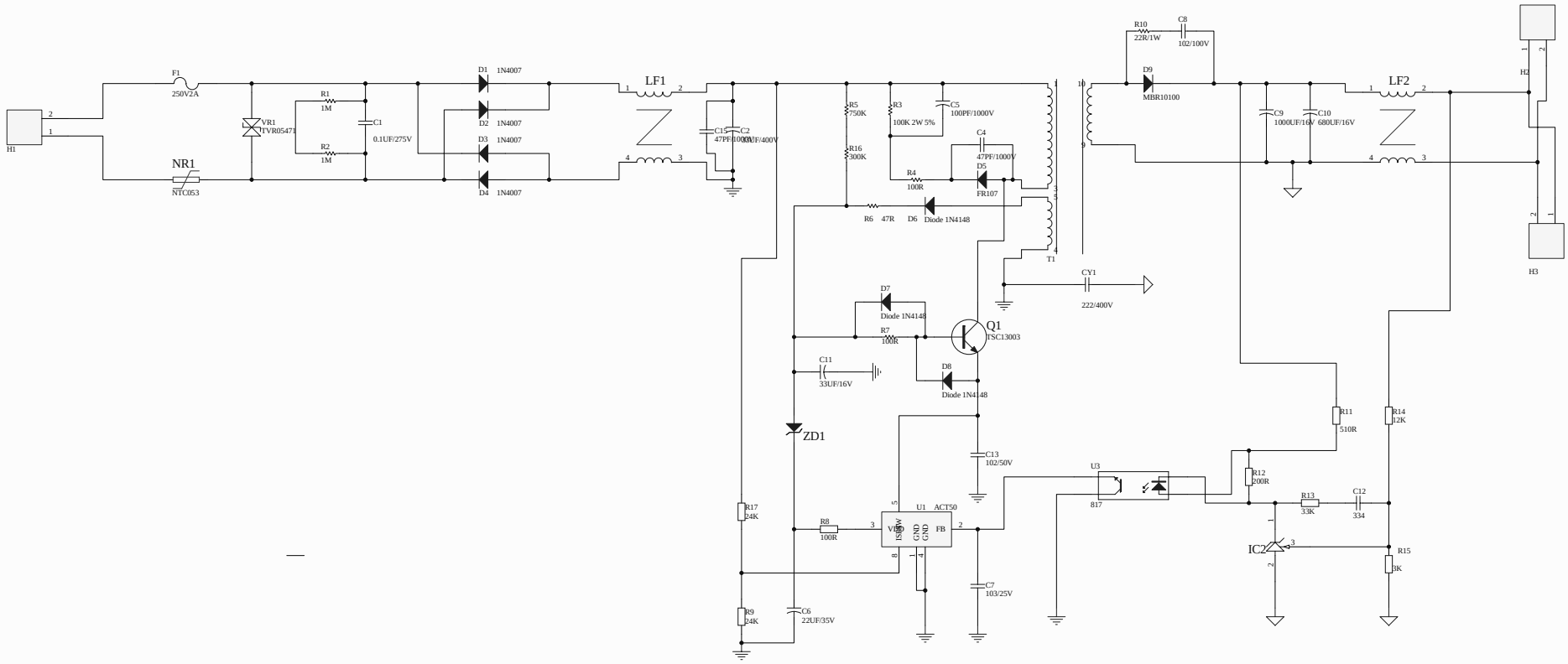

Title			
Size C	Number		Revision
Date: 2008-7-19		Sheet of	
File: E:\电源\新建文件夹\EOC12VPOWER.SchDoc		Drawn By:	