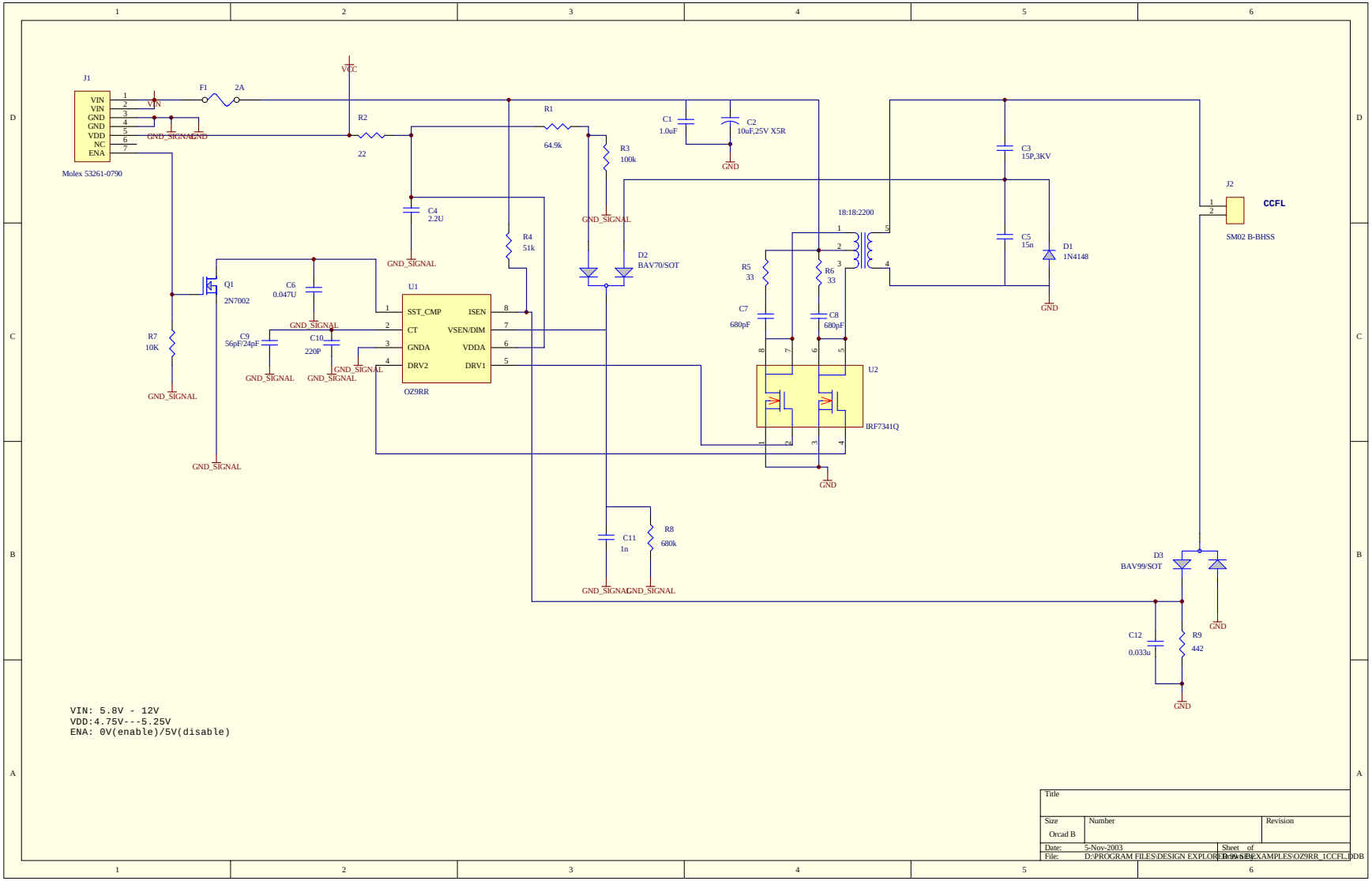

Title		
Size: Orcad B	Number	Revision
Date: 5-Nov-2003	Sheet of	
File: D:\PROGRAM FILES\DESIGN EXPLORER 99SE\EXAMPLES\OZ9RR_1CCFL.DDB		