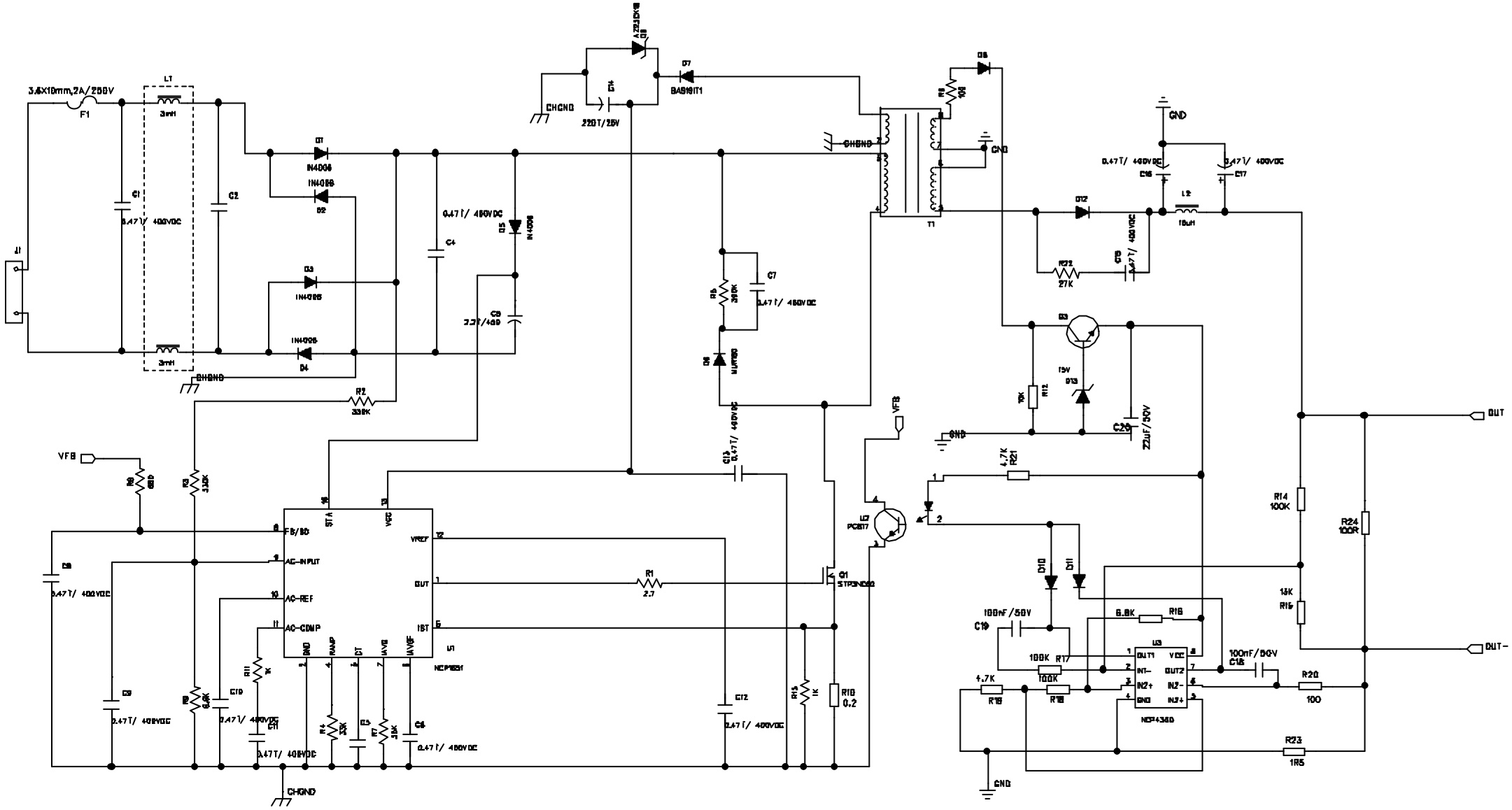60W.5A.sch-1 - Wed Jun 11 16:49:35 2008