Generated by Foxit PDF Creator © Foxit Software
http://www.foxitsoftware.com For evaluation only.

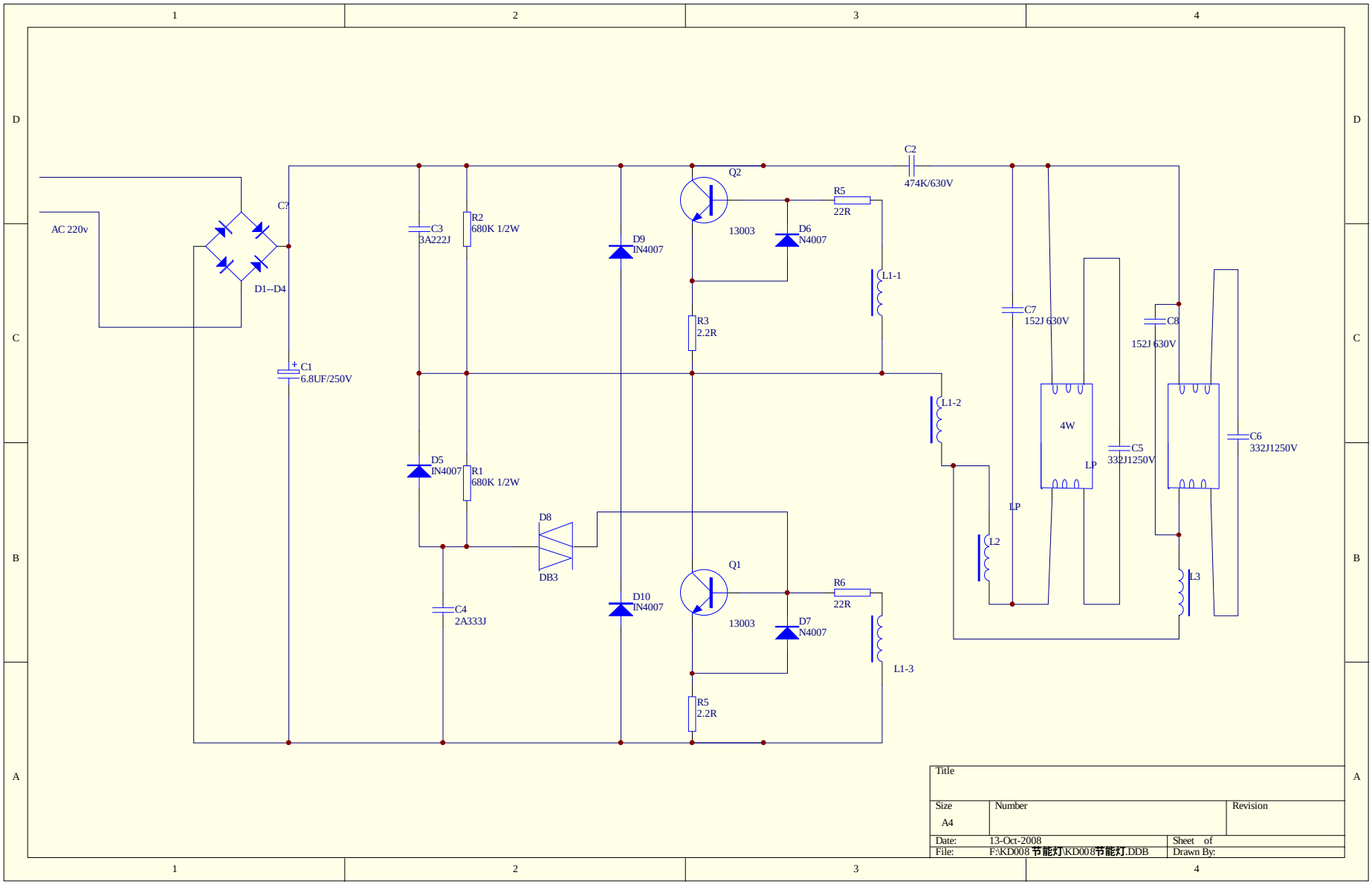

Title		
Size A4	Number	Revision
Date: 13-Oct-2008		Sheet of
File: F:\KD008节能灯\KD008节能灯.DDB		Drawn By: