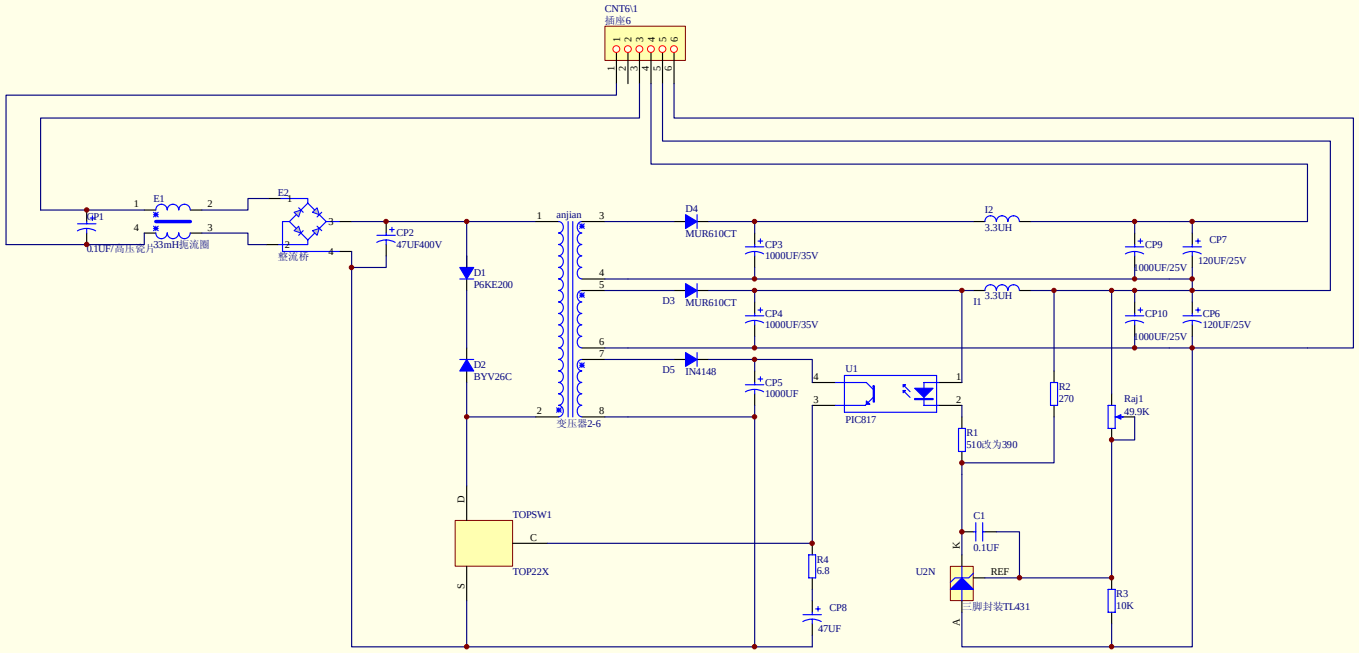

Title	开关电源	
Size B	Number	Revision
Date: 5-Oct-2008	Sheet of	
File: C:\Documents and Settings\Administrator\桌面\PCB\版合并板\the power for led driver.ddb	Drawn By:	

本图纸版权所有