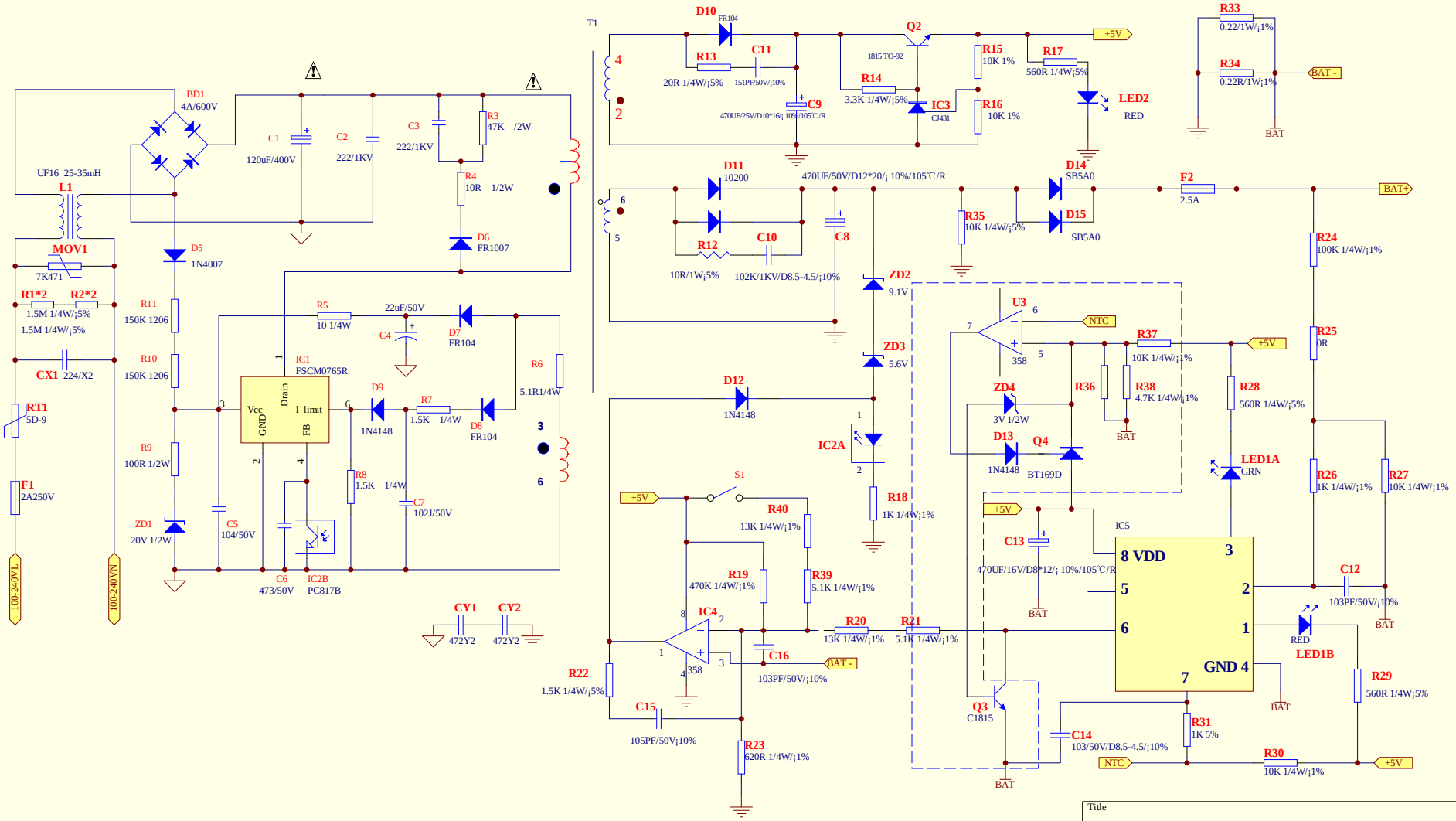
BD1
4A/600V
UF16 25-35mH
L1
MOV1
7K471
R1*2
R2*2
1.5M 1/4W¡5%
1.5M 1/4W¡5%
CX1 224/X2
RT1
5D-9
F1
2A250V
100-240VL
100-240VN
D5
1N4007
R11
150K 1206
R10
150K 1206
R9
100R 1/2W
ZD1
20V 1/2W
C1
120uF/400V
C2
222/1KV
C3
222/1KV
R3
47K /2W
R4
10R 1/2W
D6
FR1007
R5
10 1/4W
22uF/50V
C4
D7
FR104
IC1
FSCM0765R
Vcc
GND
Drain
I_limit
FB
D9
1N4148
R7
1.5K 1/4W
D8
FR104
R6
5.1R1/4W
R8
1.5K 1/4W
C7
102J/50V
C5
104/50V
C6
473/50V
IC2B
PC817B
CY1
472Y2
CY2
472Y2
T1
D10
FR104
R13
20R 1/4W¡5%
C11
151PF/50V¡10%
C9
470UF/25V/D10*16/¡ 10%/105℃/R
Q2
1815 TO-92
R14
3.3K 1/4W¡5%
IC3
CJ431
R15
10K 1%
R16
10K 1%
R17
560R 1/4W¡5%
+5V
LED2
RED
R33
0.22/1W¡1%
R34
0.22R/1W¡1%
BAT -
BAT
D11
10200
R12
10R/1W¡5%
C10
102K/1KV/D8.5-4.5/¡10%
470UF/50V/D12*20/¡ 10%/105℃/R
C8
D14
SB5A0
D15
SB5A0
R35
10K 1/4W¡5%
F2
2.5A
BAT+
R24
100K 1/4W¡1%
R25
0R
ZD2
9.1V
ZD3
5.6V
D12
1N4148
IC2A
R18
1K 1/4W¡1%
U3
358
NTC
R37
10K 1/4W¡1%
R36
R38
4.7K 1/4W¡1%
ZD4
3V 1/2W
D13
1N4148
Q4
BT169D
R28
560R 1/4W¡5%
LED1A
GRN
R26
1K 1/4W¡1%
R27
10K 1/4W¡1%
S1
R40
13K 1/4W¡1%
R19
470K 1/4W¡1%
R39
5.1K 1/4W¡1%
IC4
358
C16
103PF/50V¡10%
R20
13K 1/4W¡1%
R21
5.1K 1/4W¡1%
R22
1.5K 1/4W¡5%
C15
105PF/50V¡10%
R23
620R 1/4W¡1%
C13
470UF/16V/D8*12/¡ 10%/105℃/R
IC5
8 VDD
5
6
3
2
1
GND 4
7
C12
103PF/50V¡10%
RED
LED1B
R29
560R 1/4W¡5%
Q3
C1815
C14
103/50V/D8.5-4.5/¡10%
R31
1K 5%
R30
10K 1/4W¡1%
Title
Size
B
Number
Revision
Date: 10-Oct-2008
Sheet of
File: D:\恒源\項目\新大陆\HYCH0501503000
Drawn By: