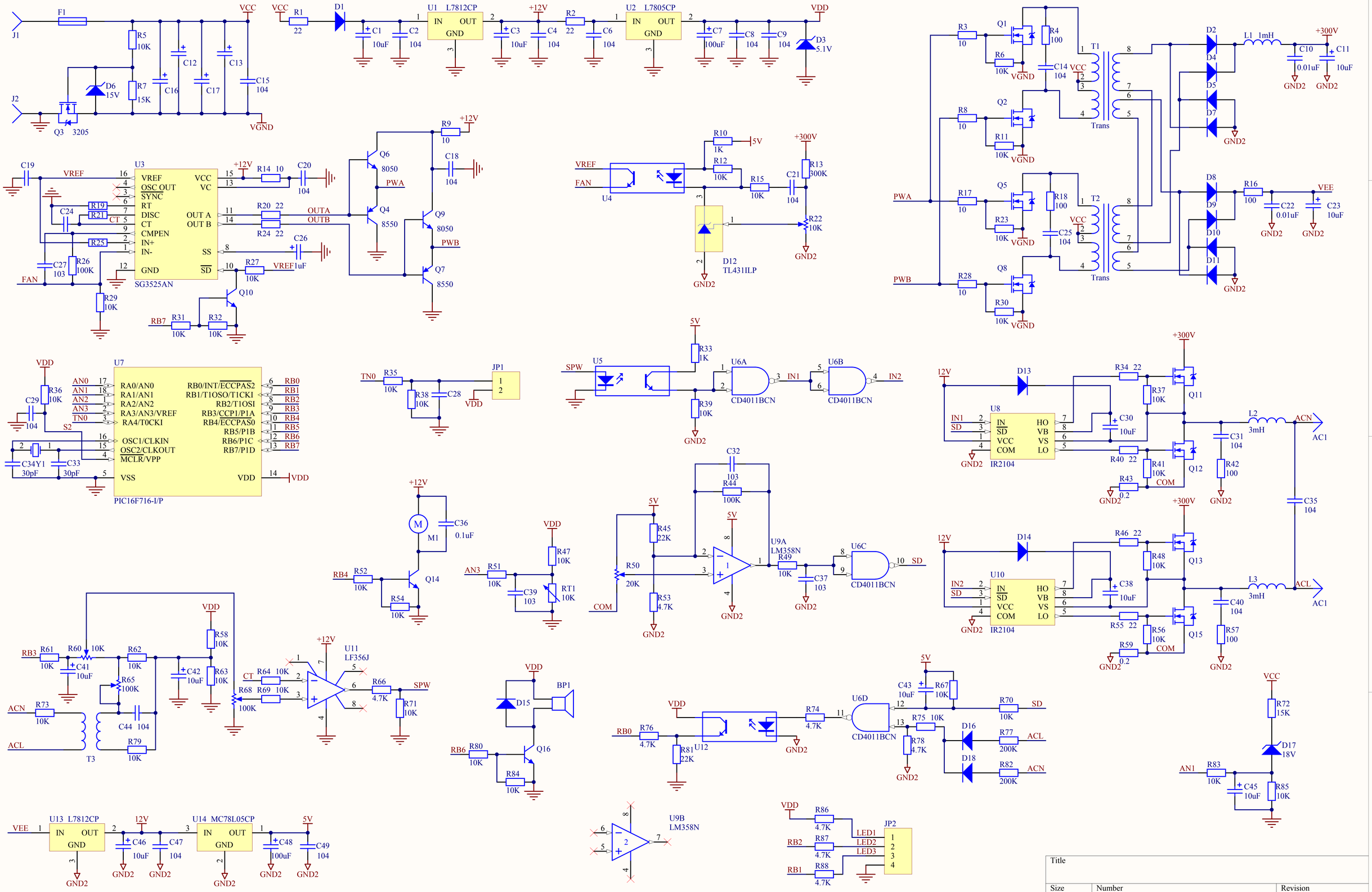

Title		
Size A3	Number	Revision
Date: 2008-12-24		Sheet of
File: D:\My Documents\..\Sheet2.SchDoc		Drawn By: