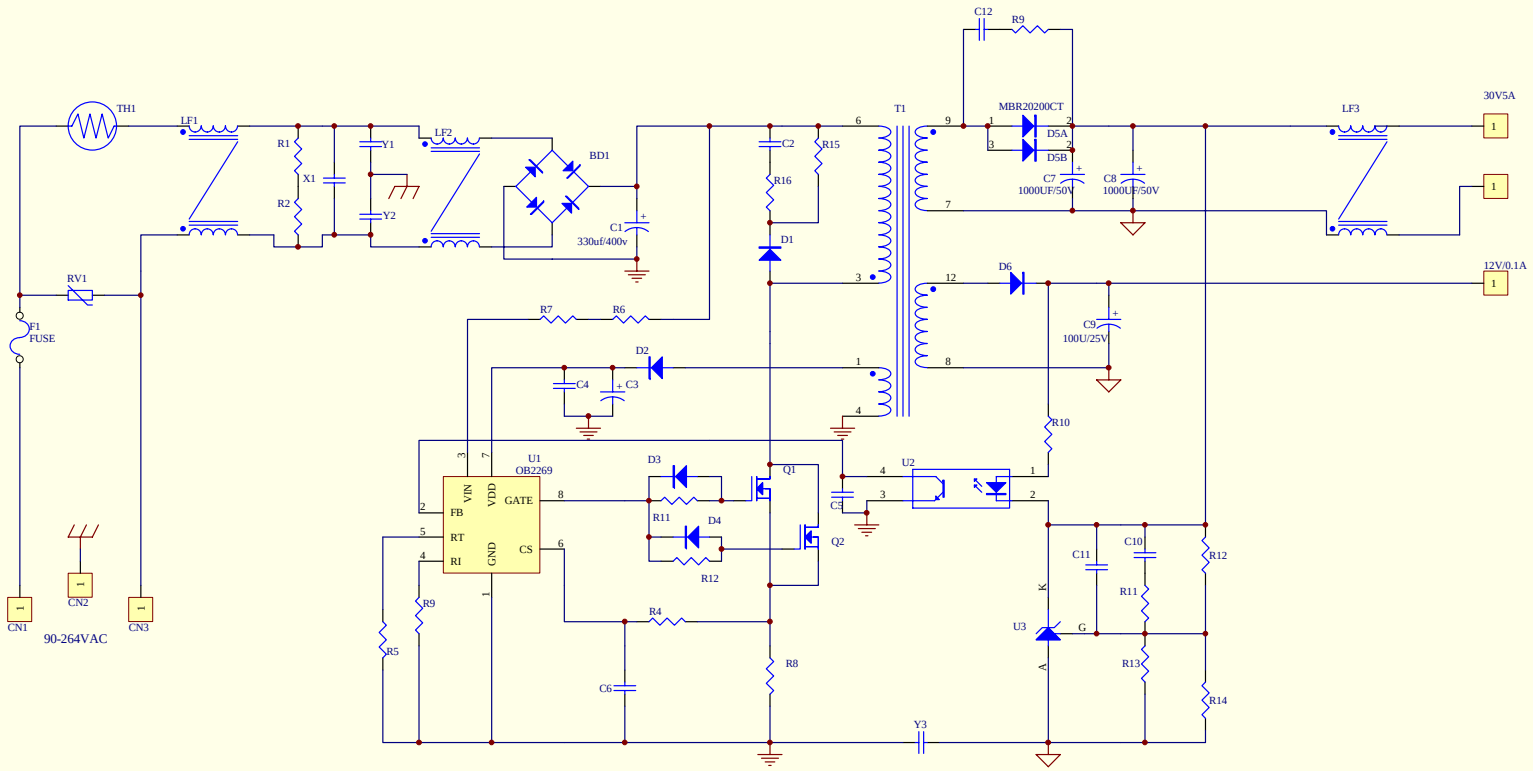

Title		
Size B	Number	Revision
Date: 4-Mar-2009	Sheet of	
File: C:\Documents and Settings\Administrator\Desktop\Drawing.Ddb	Drawn by:	