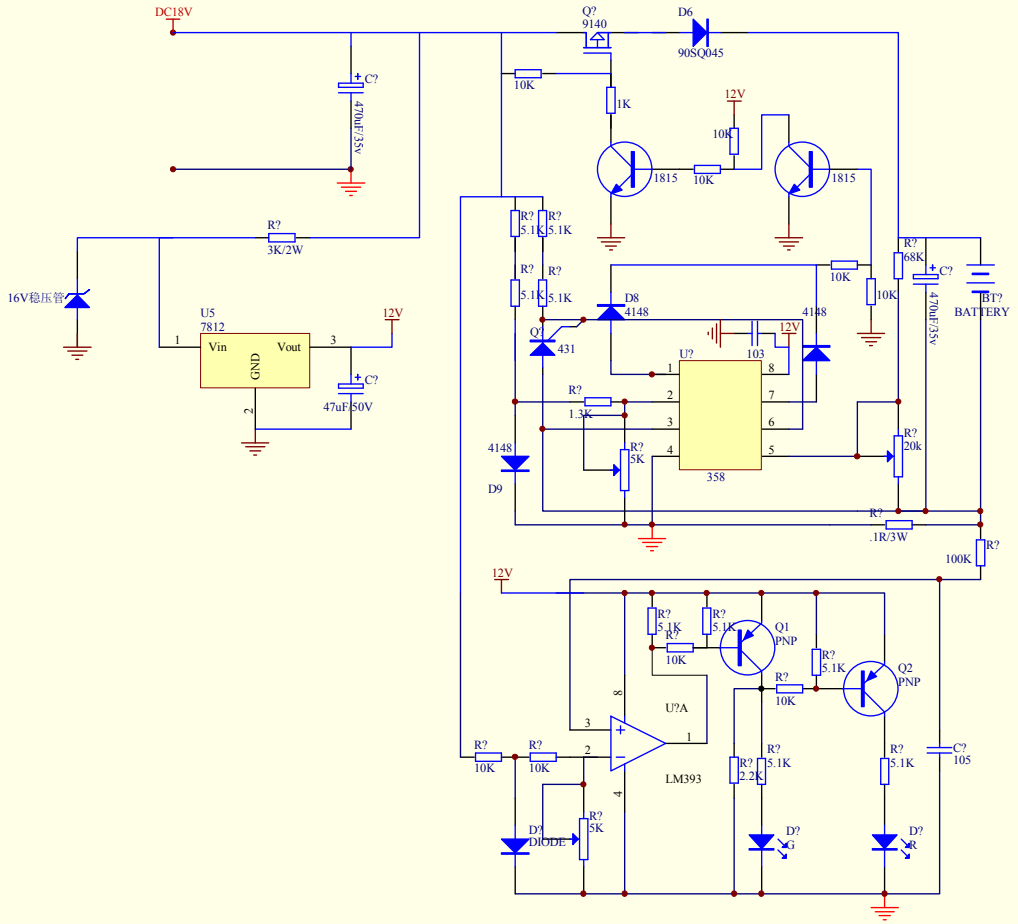

Title		
Size B	Number	Revision
Date: 16-Dec-2008		Sheet of
File: G:\高压充电板3(苏超)081111.DDB		Drawn By: