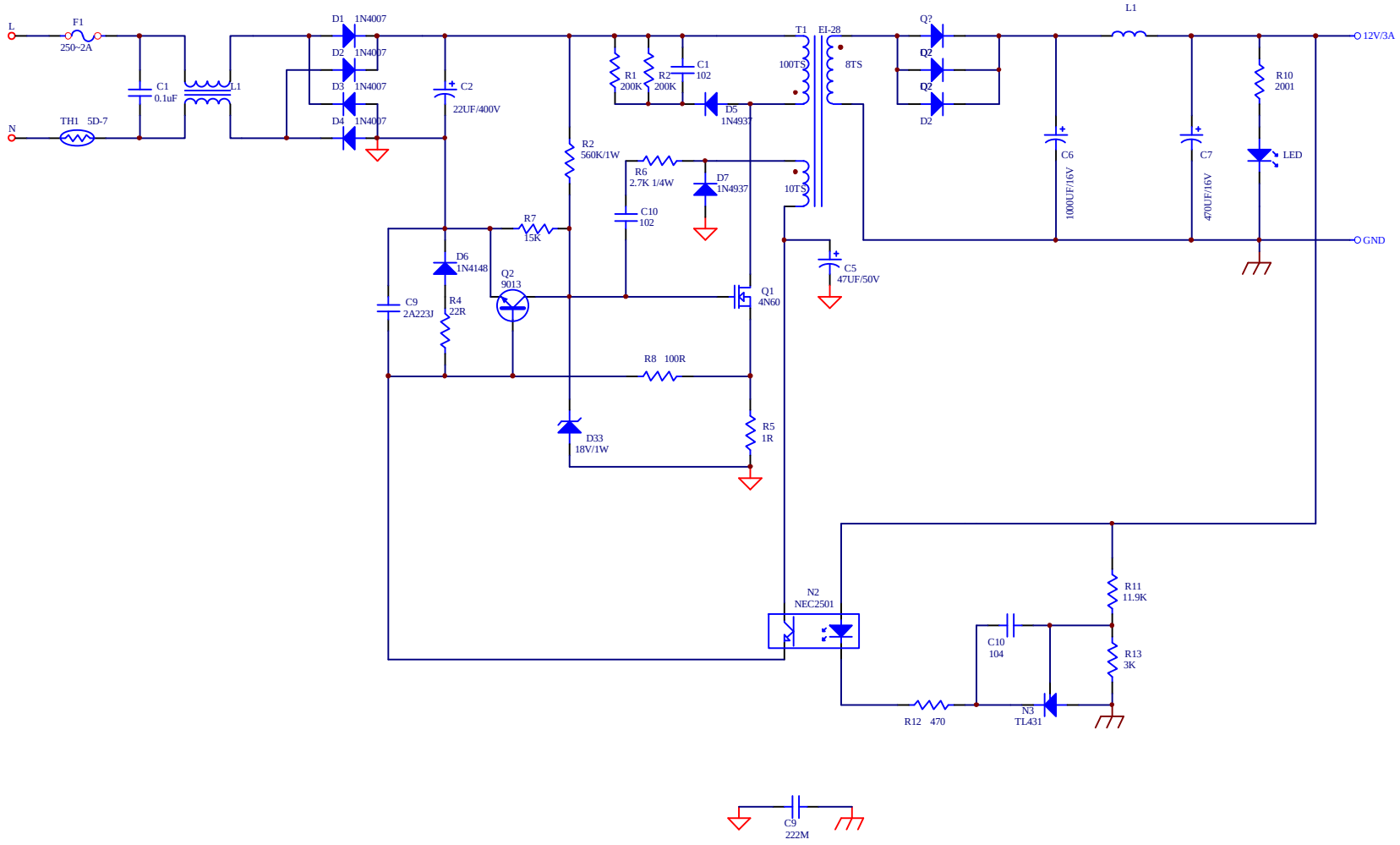

Title		
Size B	Number	Revision
Date: 1-Sep-2008		Sheet of
File: E:\公司电源\TJ-009\009.Ddb		Drawn By: