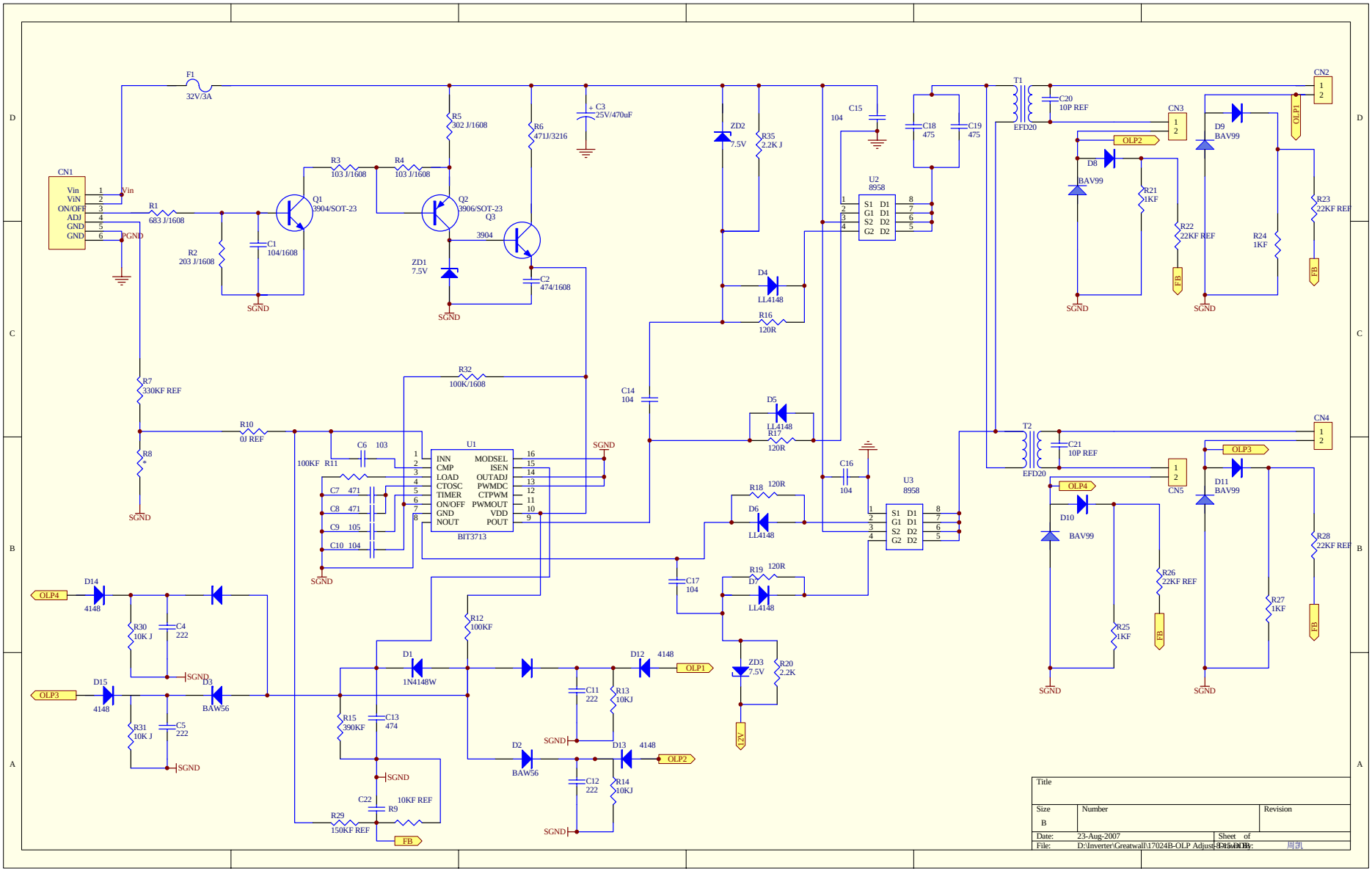
CN1
Vin
ViN
ON/OFF
ADJ
GND
GND
F1
32V/3A
R1
683 J/1608
R2
203 J/1608
C1
104/1608
Q1
3904/SOT-23
R3
103 J/1608
R4
103 J/1608
Q2
3906/SOT-23
Q3
3904
R5
302 J/1608
R6
471J/3216
ZD1
7.5V
C2
474/1608
C3
25V/470uF
ZD2
7.5V
R35
2.2K J
D4
LL4148
R16
120R
C15
104
U2
8958
S1 D1
G1 D1
S2 D2
G2 D2
C18
475
C19
475
T1
EFD20
C20
10P REF
CN2
CN3
OLP1
OLP2
D8
BAV99
D9
BAV99
R21
1KF
R22
22KF REF
R23
22KF REF
R24
1KF
FB
SGND
R7
330KF REF
R8
*
R10
0J REF
R32
100K/1608
C14
104
D5
LL4148
R17
120R
C16
104
U3
8958
T2
EFD20
C21
10P REF
CN4
CN5
OLP3
OLP4
D10
BAV99
D11
BAV99
R25
1KF
R26
22KF REF
R27
1KF
R28
22KF REF
U1
INN
CMP
LOAD
CTOSC
TIMER
ON/OFF
GND
NOUT
MODSEL
ISEN
OUTADJ
PWMDC
CTPWM
PWMOUT
VDD
POUT
BIT3713
C6 103
100KF R11
C7 471
C8 471
C9 105
C10 104
R18 120R
D6
LL4148
R19 120R
D7
LL4148
C17
104
ZD3
7.5V
R20
2.2K
12V
D14
4148
R30
10K J
C4
222
D15
4148
R31
10K J
C5
222
D3
BAW56
R12
100KF
D1
1N4148W
R15
390KF
C13
474
C22
R9
10KF REF
R29
150KF REF
D12
4148
C11
222
R13
10KJ
D2
BAW56
D13
4148
C12
222
R14
10KJ
Title
Size
B
Number
Revision
Date: 23-Aug-2007
Sheet of
File: D:\Inverter\Greatwall\17024B-OLP Adjust.SchDoc
Drawn By: 周凯