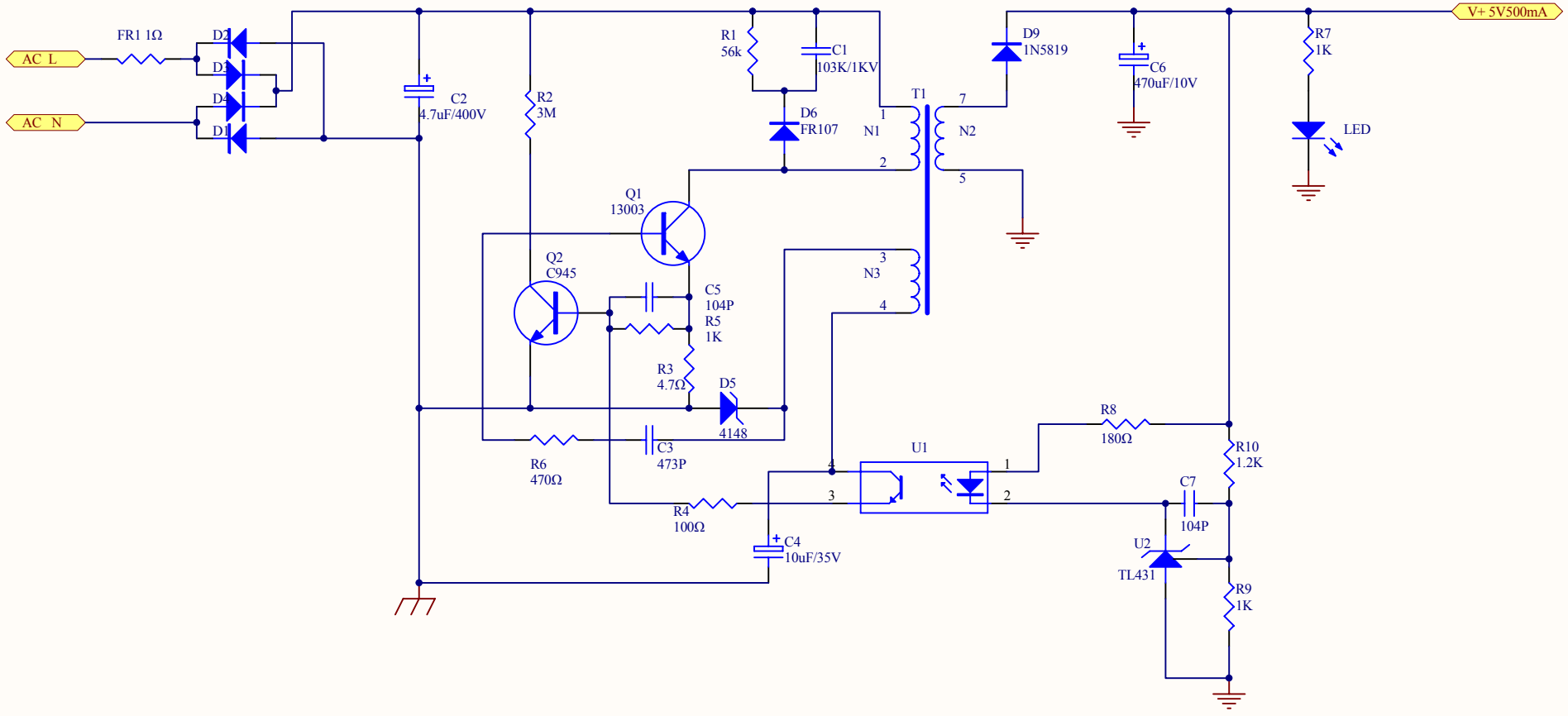

Title		
Size A4	Number	Revision
Date: 2009-4-26		Sheet of
File: C:\Documents and Settings\..\TC-028改好.SchDoc		Drawn By: