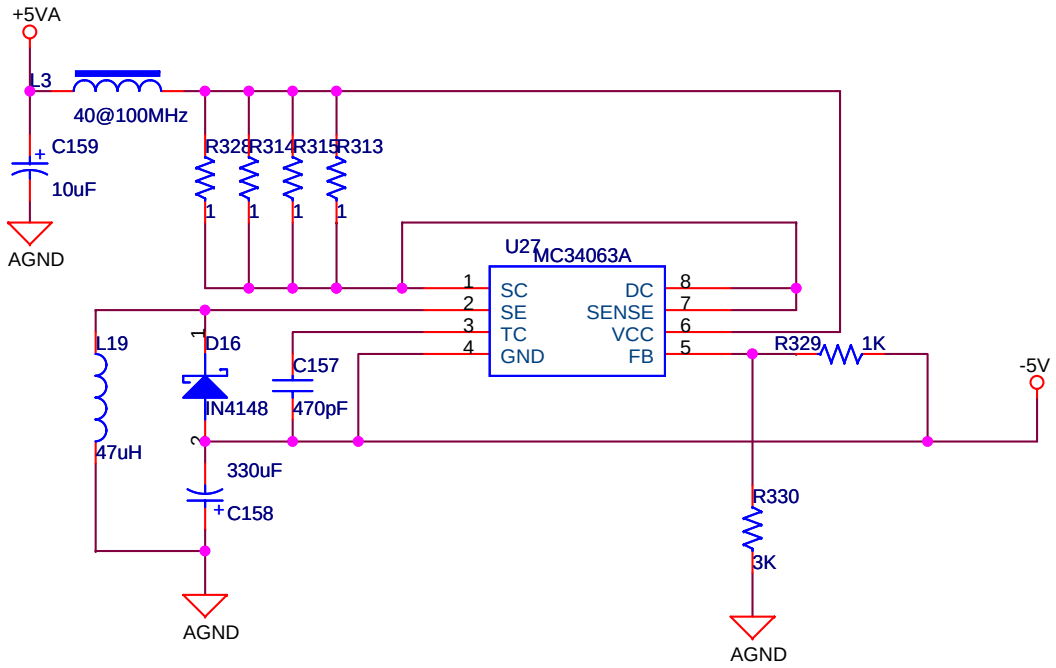


| | | |
|---|---|---|
| Title <Title> | | |
| Size A | Document Number <Doc> | Rev <RevCode> |
| Date: Thursday, February 15, 2001 | Sheet 1 of 1 | |