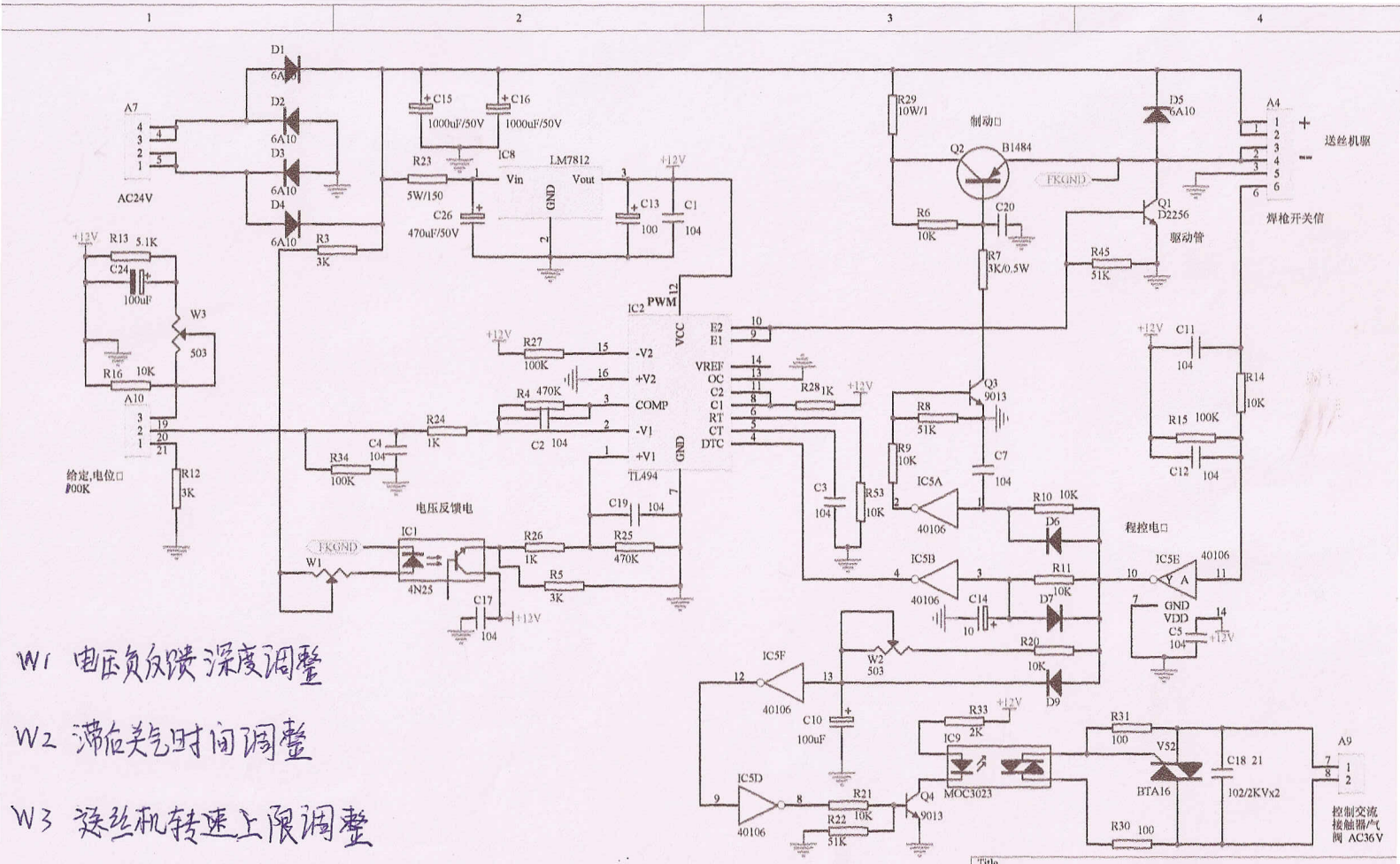

W1 电压负反馈深度调整

W2 滞后关气时间调整

W3 送丝机转速上限调整

Title		
Size A4	Number	Revision
Date: 10-May-2009		Sheet of
File: D:\My Documents\MyDesign.ddb		Drawn By: