FOSVOS
GM6802-10

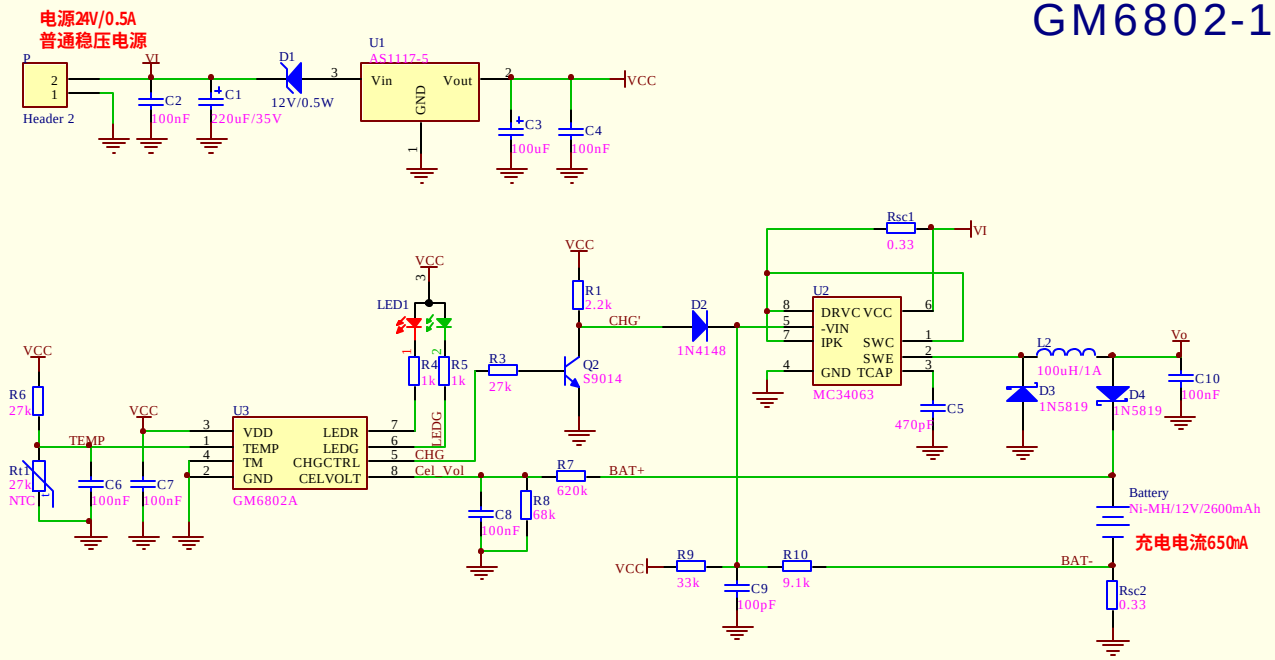

Title *			
Designed By:		Size: A4	REF NO:
Checked By:		VER:	Sheet of

福 跃 电 子
Fosvos Electronic
www.fosvos.com