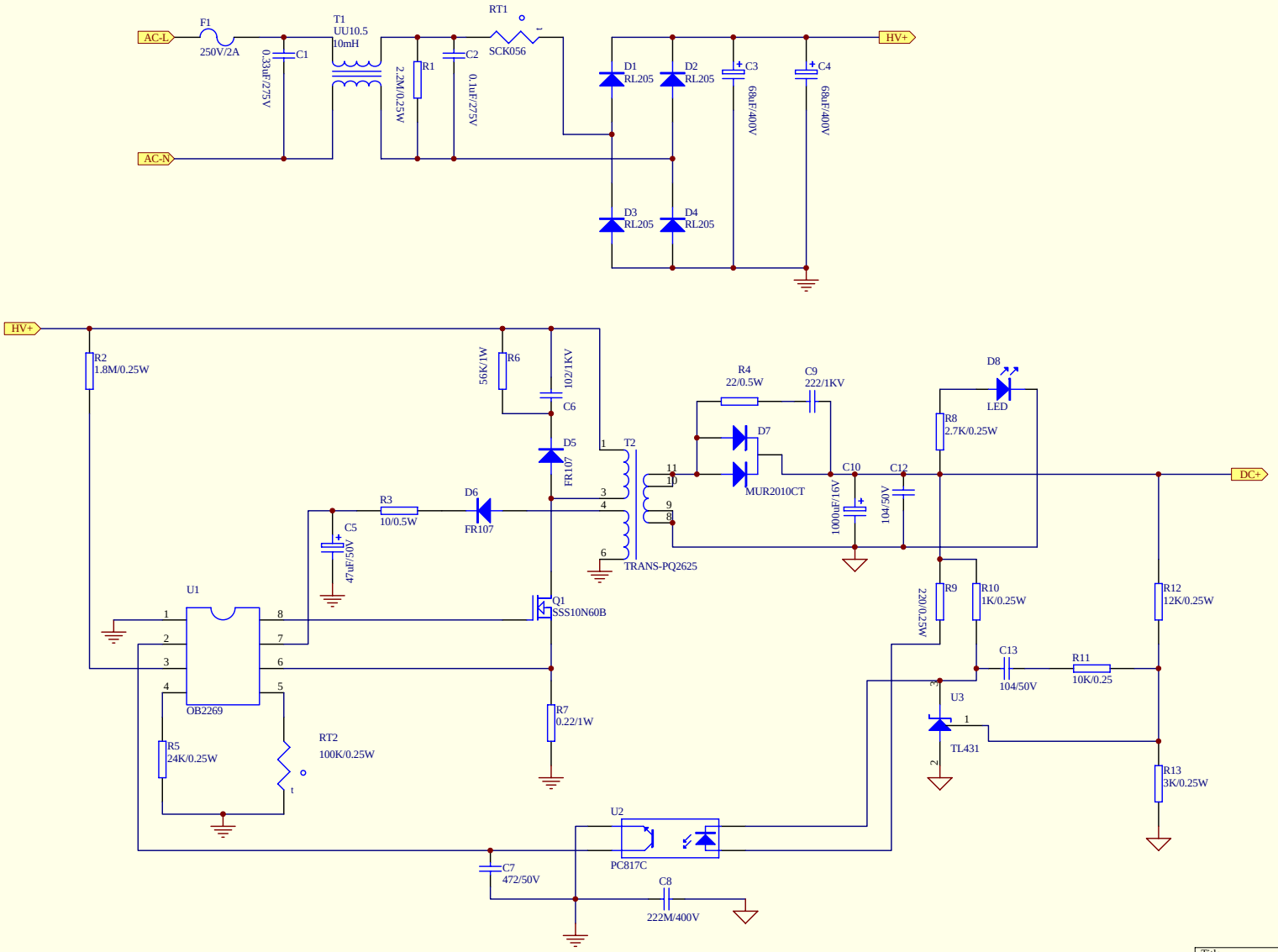

Title		
Size B	Number	Revision
Date: 1-Jul-2009	Sheet of	
File: E:\EO3\L\12V5A\12V5A.ddb	Drawn By:	