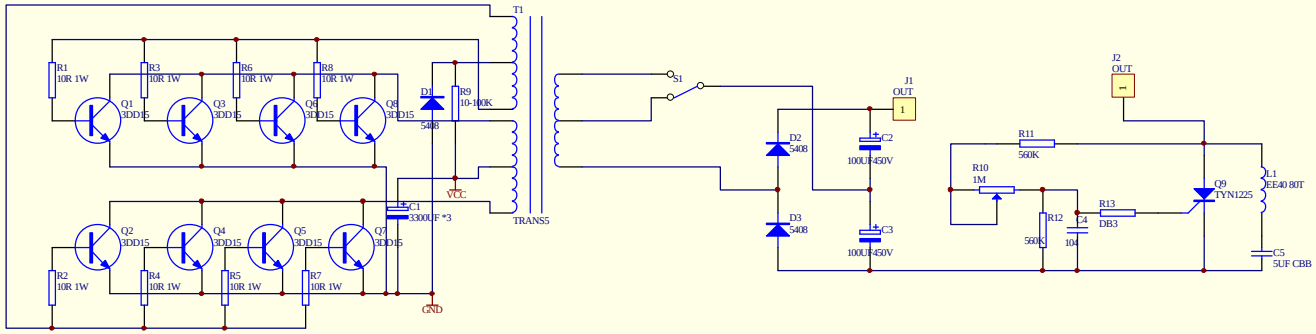

Title		
Size B	Number	Revision
Date: 6-Jun-2009	Sheet of	
File: C:\Documents and Settings\Administrator\桌面\Protel\EE55\55.ddb	Drawn By:	

PDF 文件使用 "pdfFactory Pro" 试用版本创建 www.fineprint.cn