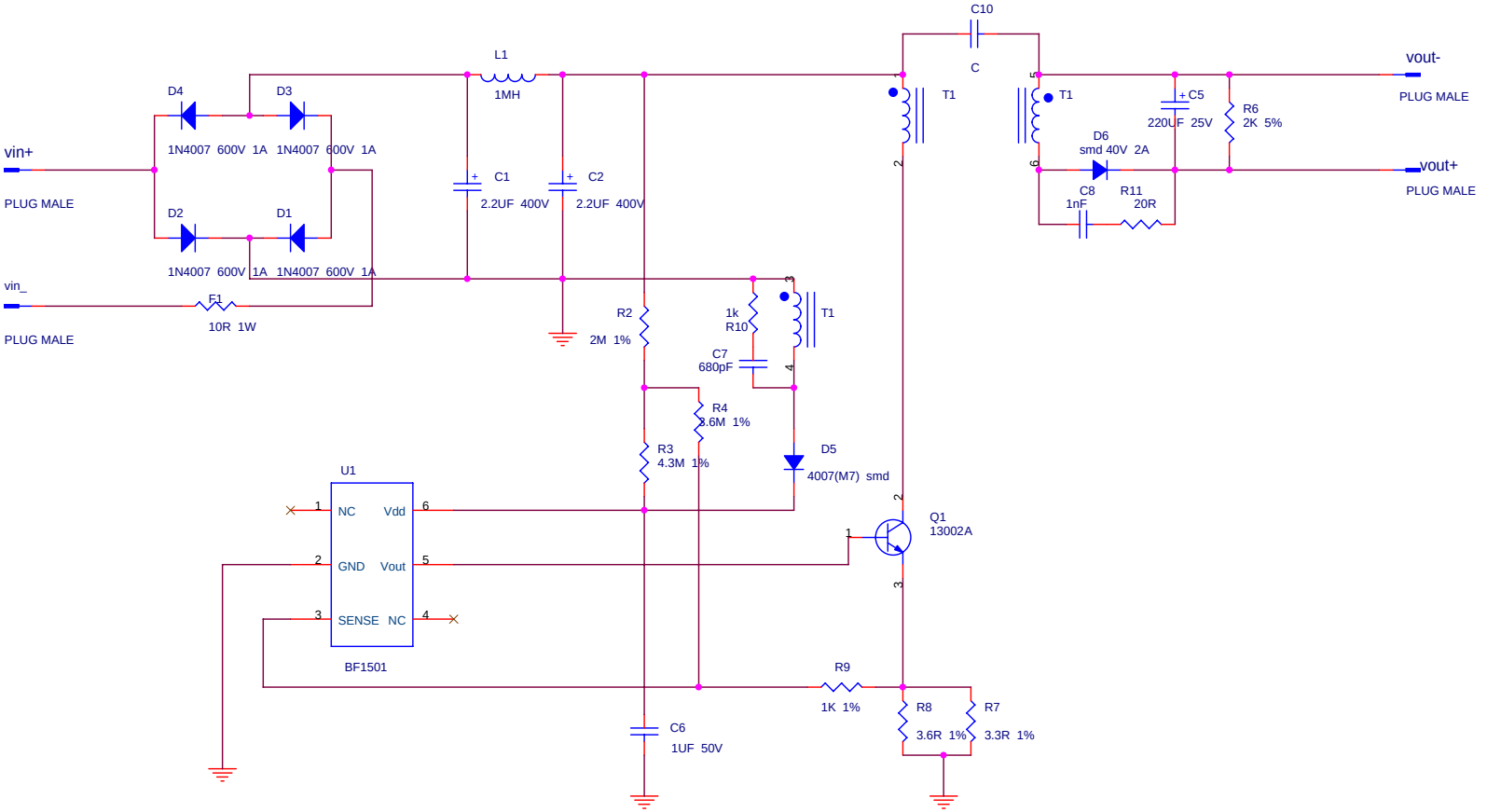

Title <Title>		
Size B	Document Number <Doc>	Rev <RevCode>
Date: Monday, September 01, 2008	Sheet 1 of 1	