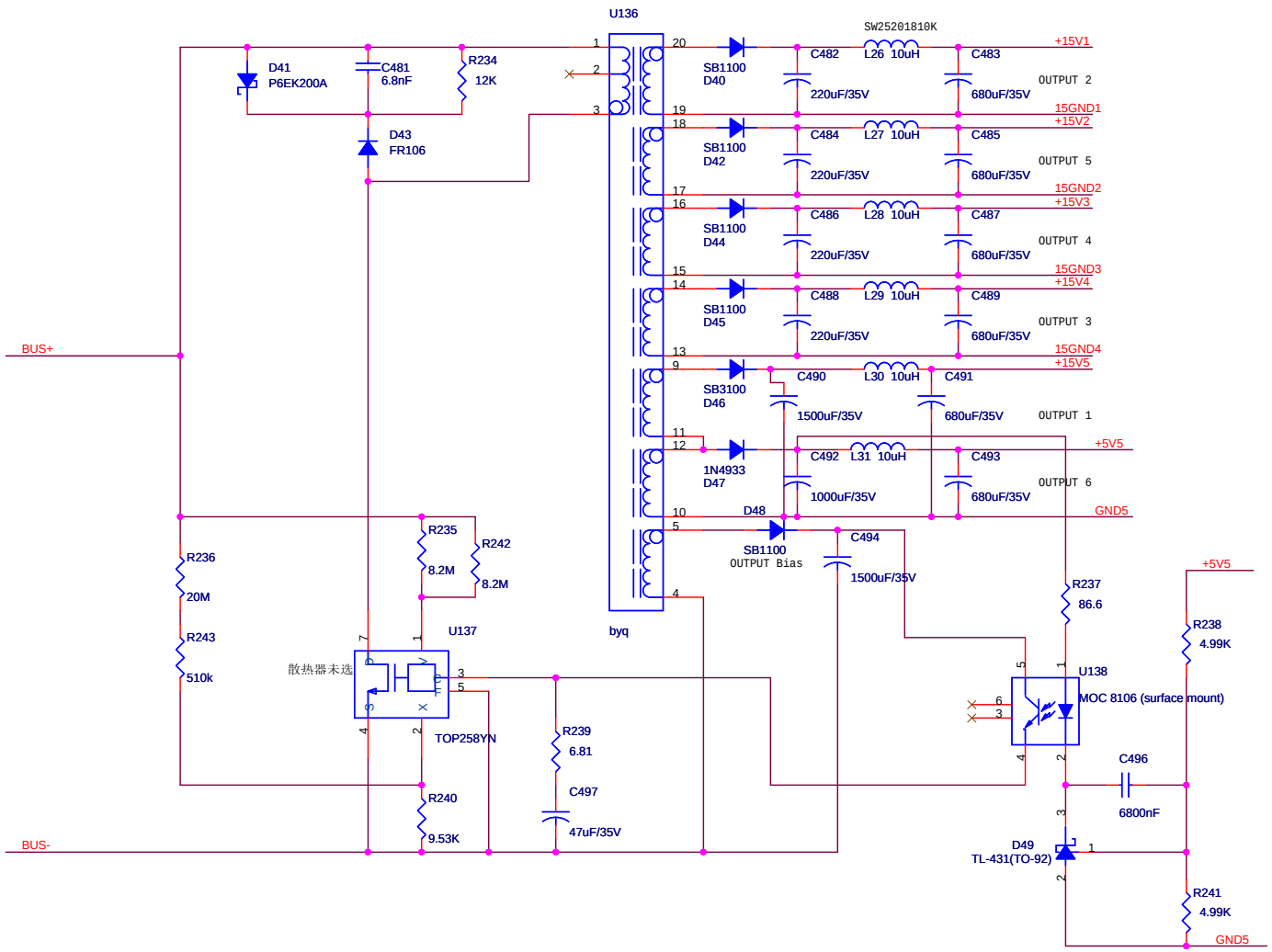

Title	<Title>		
Size B	Document Number <Doc>		Rev <RevCode>
Date: Friday, August 14, 2009	Sheet 1 of 10		