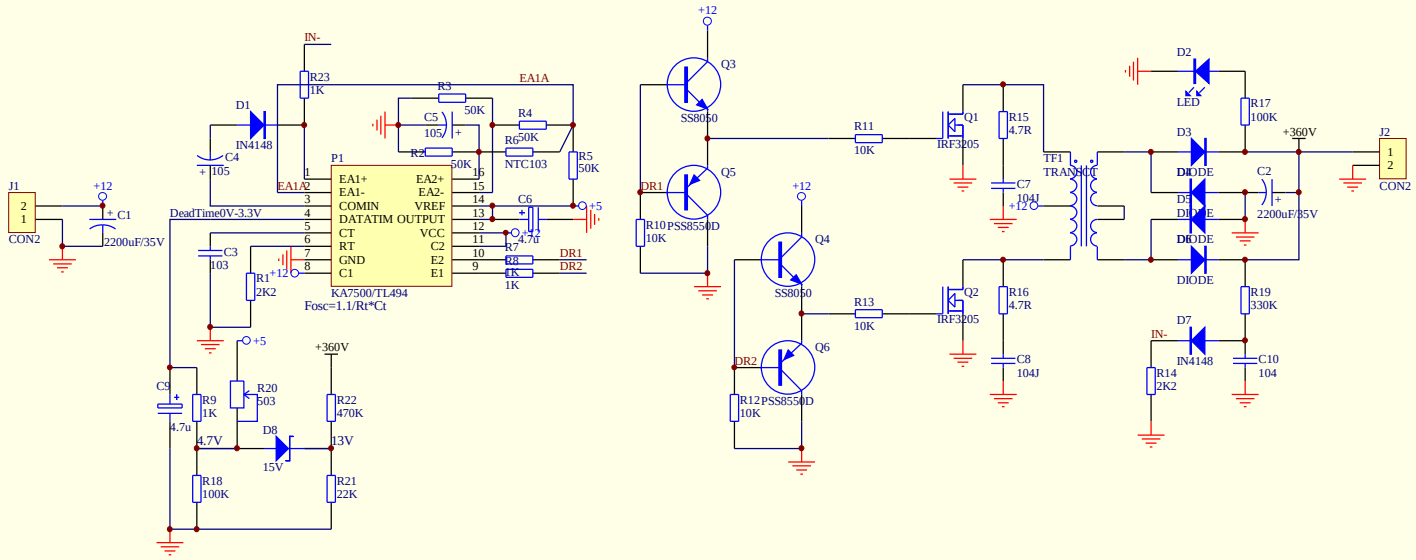

Title		
Size B	Number	Revision
Date: 20-Nov-2009		Sheet of
File: G:\DQ\Protel\SolarSystem.ddb		Drawn By:

PDF created with FinePrint pdfFactory trial version http://www.fineprint.com