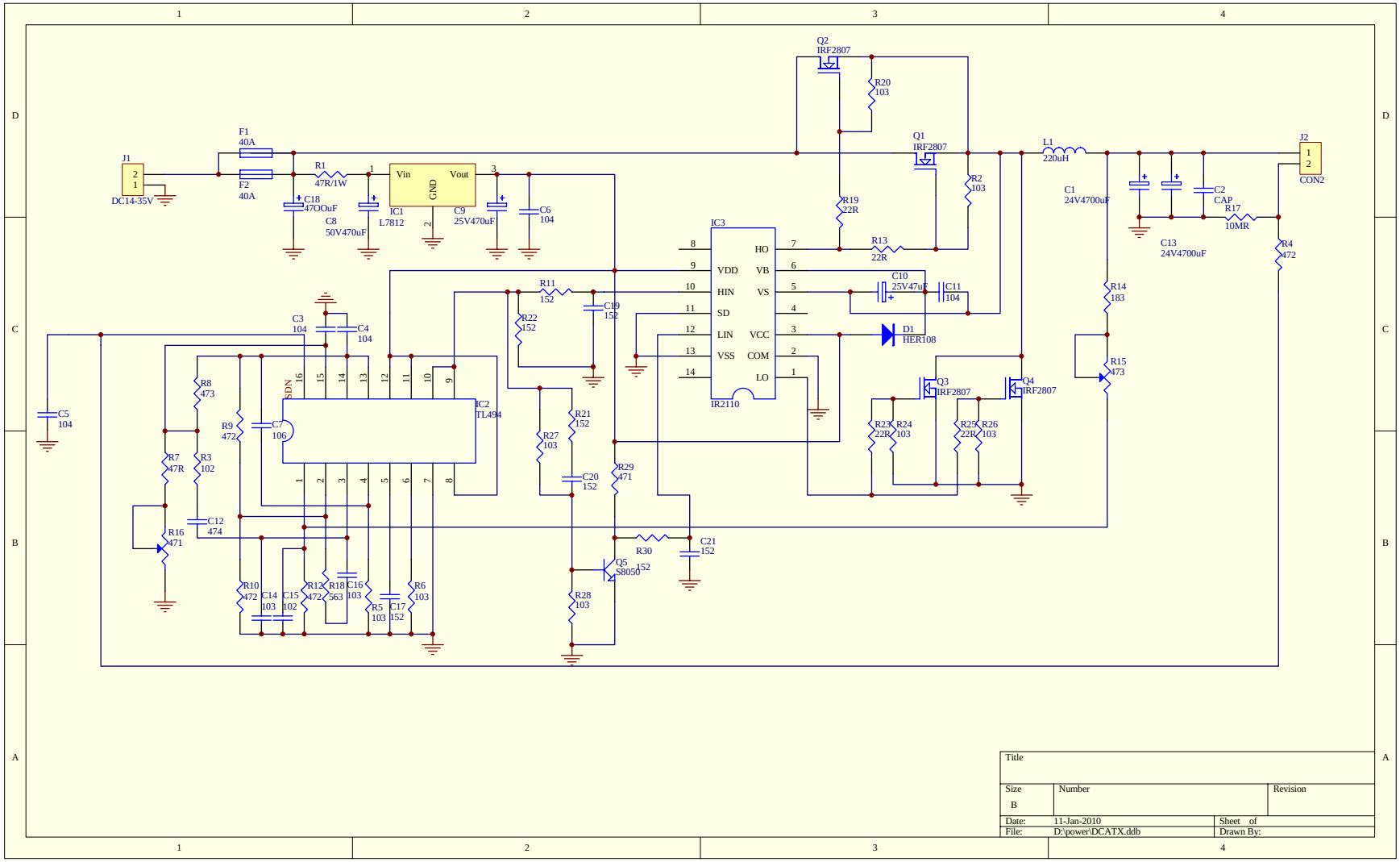

Title		
Size B	Number	Revision
Date: 11-Jan-2010	Sheet of	
File: D:\power\DCATX.ddb	Drawn By:	