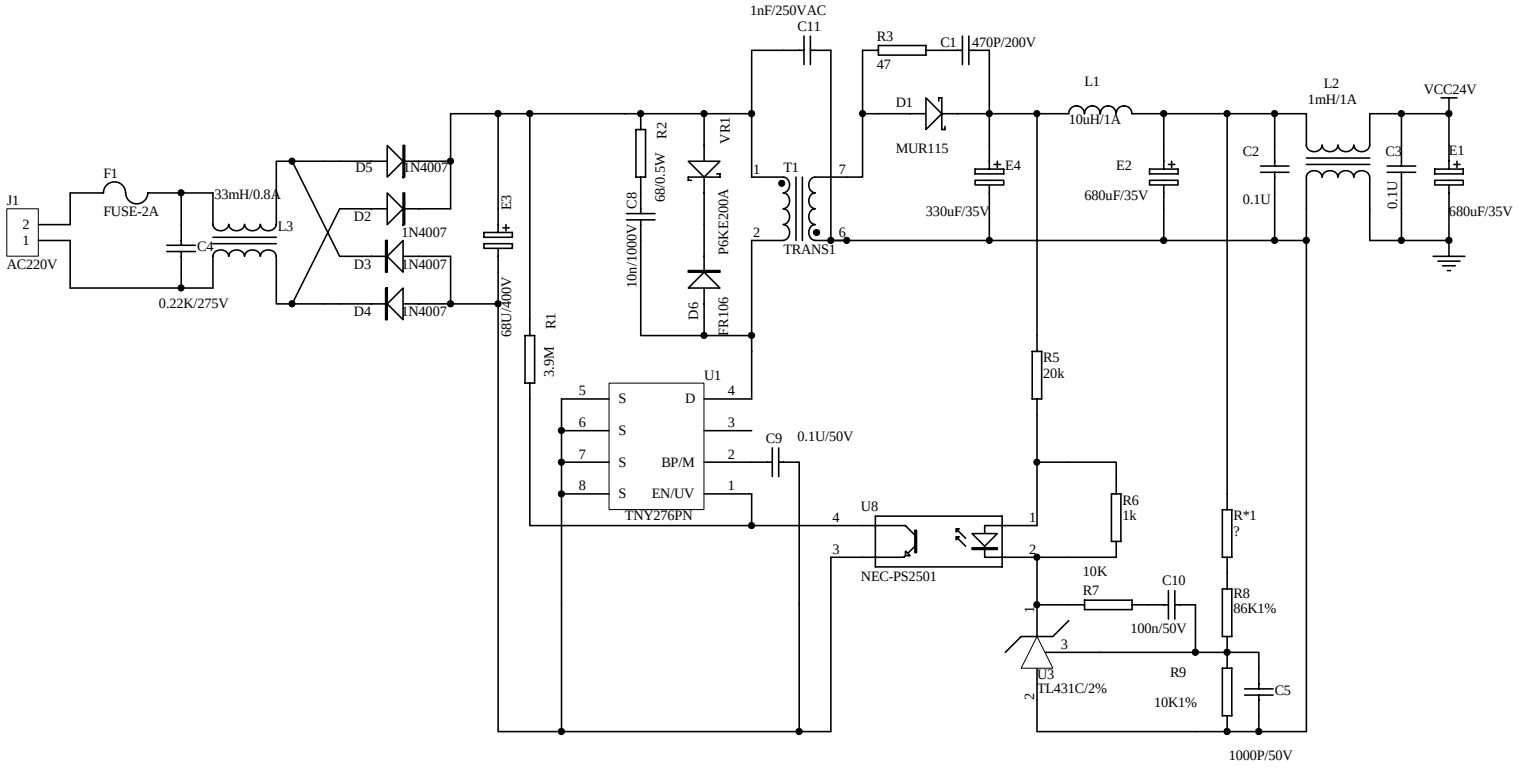

Title		
Size A4	Number	Revision
Date: 14-May-2010		Sheet of
File: D:\MYWORKS\meter.ddb		Drawn By: