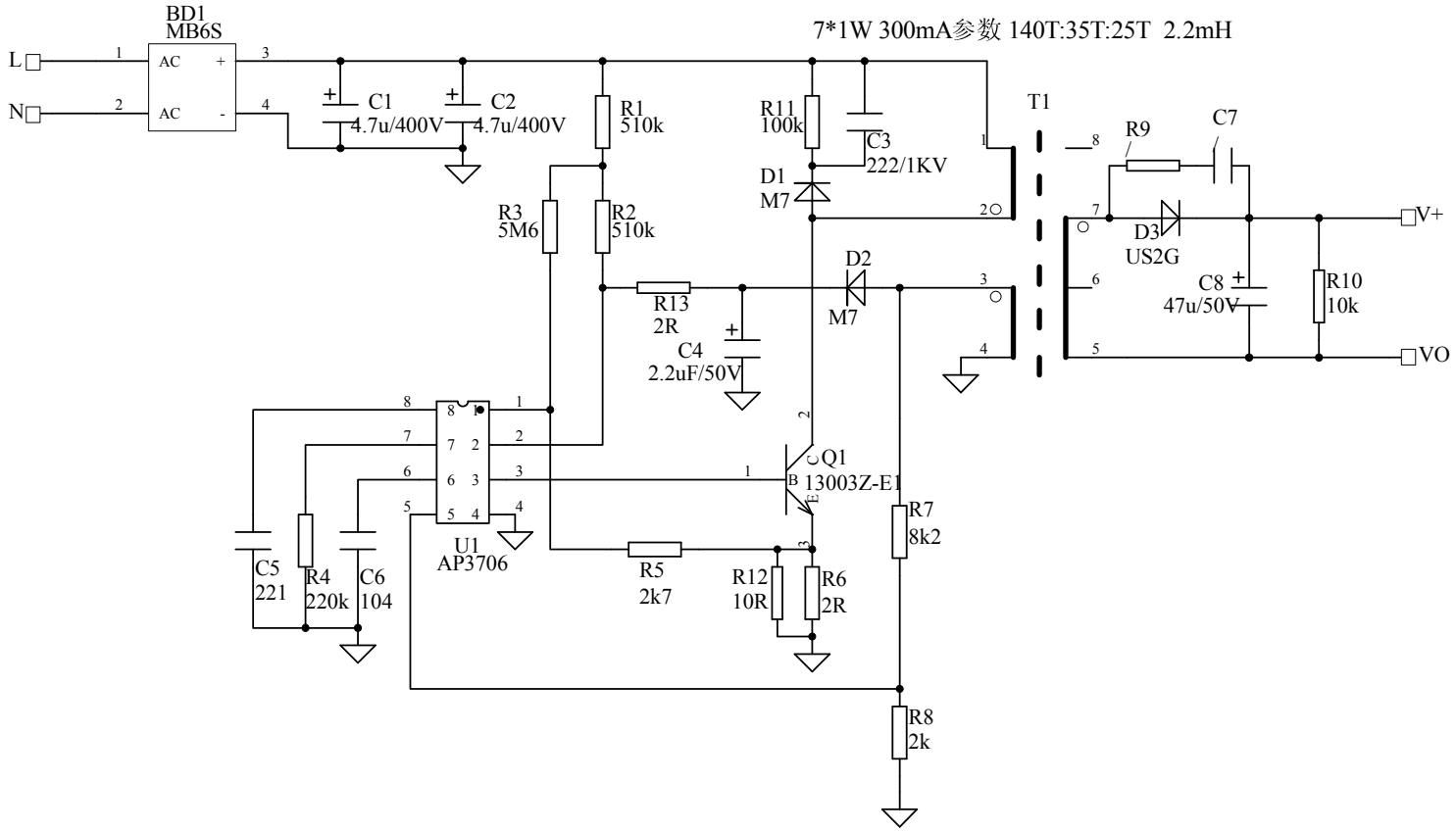

Title		File	11.Sch
Organization			
Address			
No.		Rev A0	Page
Apper		Approve	Date 18-May-2010