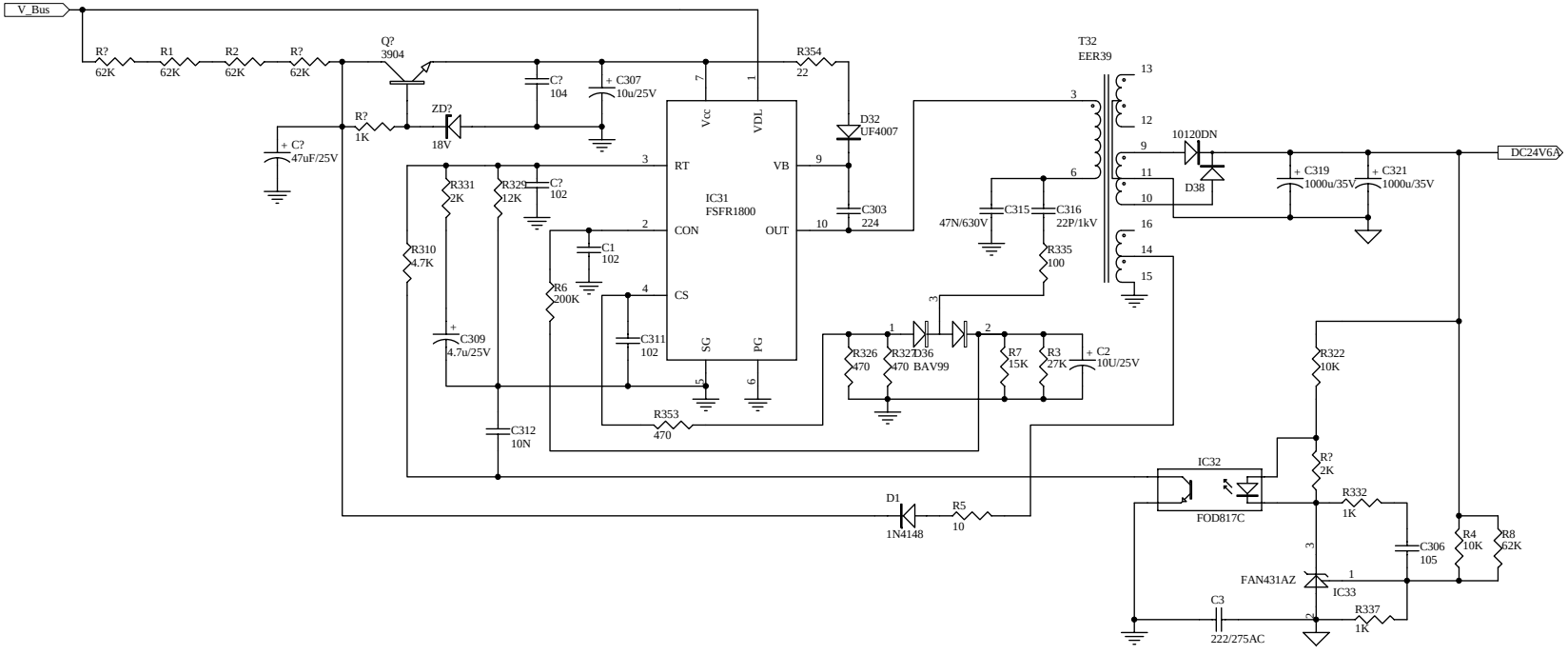
V_Bus
R?
62K
R1
62K
R2
62K
R?
62K
Q?
3904
R?
1K
ZD?
18V
C?
47uF/25V
C?
104
C307
10u/25V
R354
22
D32
UF4007
IC31
FSFR1800
Vcc
VDL
RT
VB
CON
OUT
CS
SG
PG
R331
2K
R329
12K
C?
102
R310
4.7K
C1
102
R6
200K
C309
4.7u/25V
C311
102
C312
10N
R353
470
C303
224
T32
EER39
10120DN
D38
C319
1000u/35V
C321
1000u/35V
DC24V6A
C315
47N/630V
C316
22P/1kV
R335
100
R326
470
R327
470
D36
BAV99
R7
15K
R3
27K
C2
10U/25V
R322
10K
IC32
FOD817C
R?
2K
R332
1K
C306
105
R4
10K
R8
62K
FAN431AZ
IC33
C3
222/275AC
R337
1K
D1
1N4148
R5
10