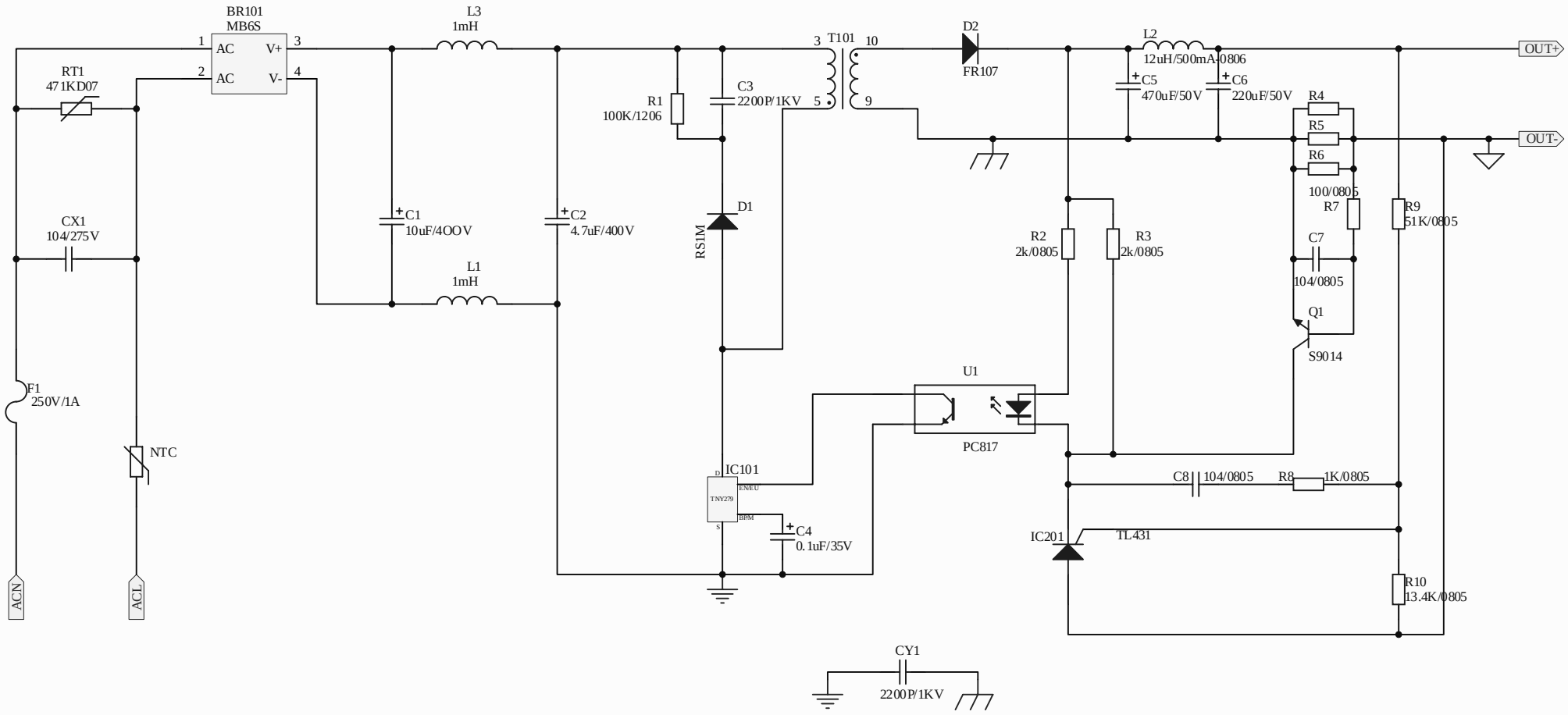

Title		
Size A4	Number	Revision
Date: 2010-6-10	Sheet of	
File: G:\博纳华艺室内照明新样板\..\8LED-1.SCHDOC	Drawn By:	