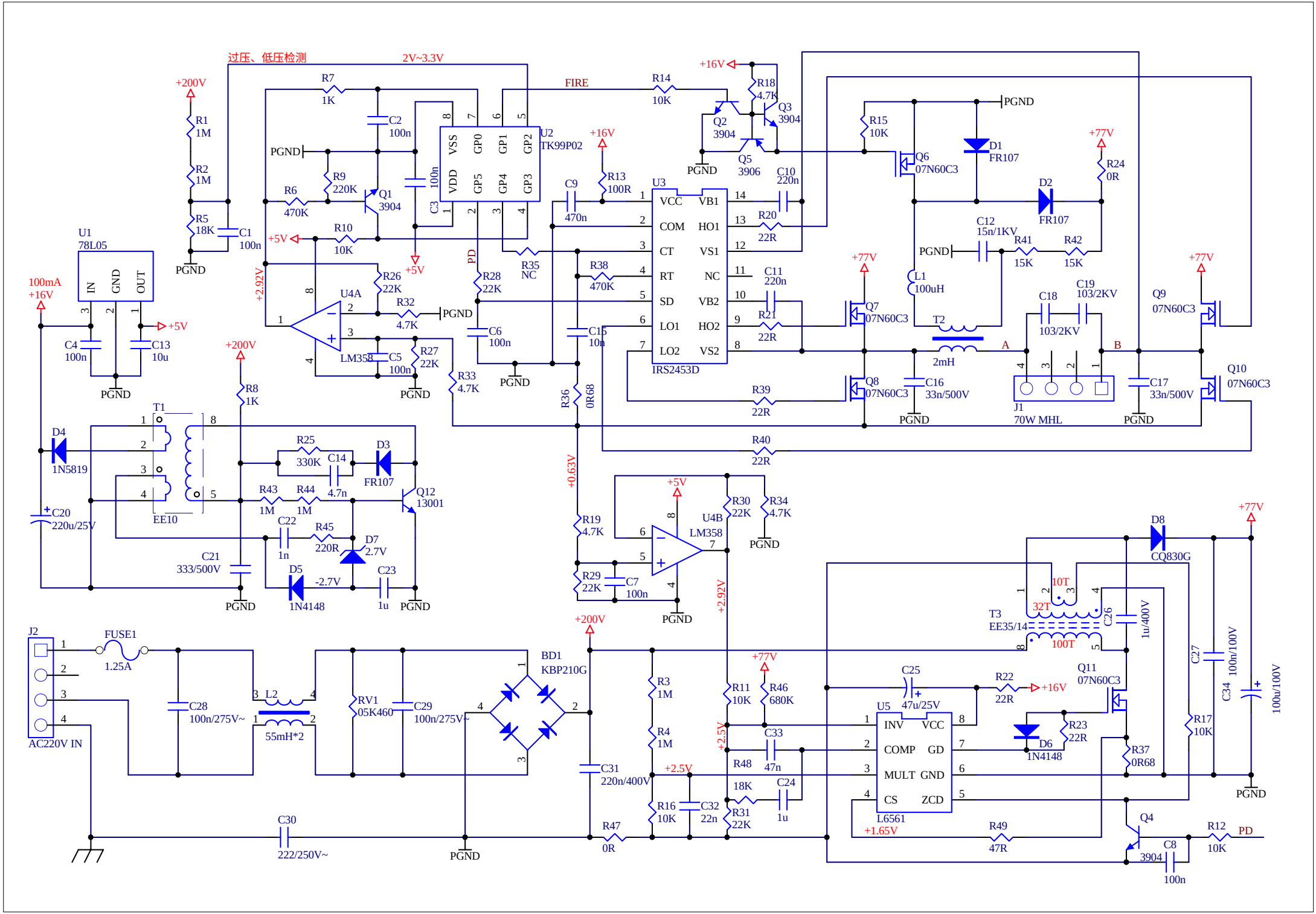
过压、低压检测
2V~3.3V
+200V
R1 1M
R2 1M
R5 18K
C1 100n
PGND
R7 1K
C2 100n
R9 220K
Q1 3904
R6 470K
R10 10K
+5V
U2 TK99P02
VSS GP0 GP1 GP2
VDD GP5 GP4 GP3
C3 100n
FIRE
R14 10K
+16V
R18 4.7K
Q3 3904
Q2 3904
Q5 3906
C9 470n
R13 100R
U3 IRS2453D
VCC COM CT RT SD LO1 LO2
VB1 HO1 VS1 NC VB2 HO2 VS2
C10 220n
R20 22R
C11 220n
R21 22R
R39 22R
R35 NC
R38 470K
C15 10n
PD
R28 22K
C6 100n
R26 22K
R32 4.7K
U4A LM358
C5 100n
R27 22K
R33 4.7K
+2.92V
R36 0R68
+0.63V
U1 78L05
IN GND OUT
100mA
C4 100n
C13 10u
R8 1K
T1 EE10
D4 1N5819
C20 220u/25V
C21 333/500V
R25 330K
C14 4.7n
D3 FR107
R43 1M
R44 1M
Q12 13001
C22 1n
R45 220R
D7 2.7V
D5 1N4148
C23 1u
R19 4.7K
U4B LM358
R30 22K
R34 4.7K
R29 22K
C7 100n
R15 10K
Q6 07N60C3
D1 FR107
D2 FR107
R24 0R
+77V
C12 15n/1KV
R41 15K
R42 15K
L1 100uH
Q7 07N60C3
Q8 07N60C3
T2 2mH
C18 103/2KV
C19 103/2KV
A
B
J1 70W MHL
C16 33n/500V
C17 33n/500V
Q9 07N60C3
Q10 07N60C3
R40 22R
J2 AC220V IN
FUSE1 1.25A
C28 100n/275V~
L2 55mH*2
RV1 05K460
C29 100n/275V~
BD1 KBP210G
C30 222/250V~
C31 220n/400V
R3 1M
R4 1M
R16 10K
C32 22n
R47 0R
+2.5V
R11 10K
R46 680K
C33 47n
R48 18K
R31 22K
C24 1u
U5 L6561
INV COMP MULT CS VCC GD GND ZCD
C25 47u/25V
R22 22R
R23 22R
D6 1N4148
Q11 07N60C3
R37 0R68
+1.65V
R49 47R
Q4 3904
C8 100n
R12 10K
PD
D8 CQ830G
T3 EE35/14
10T
32T
100T
C26 1u/400V
C27 100n/100V
C34 100u/100V
R17 10K