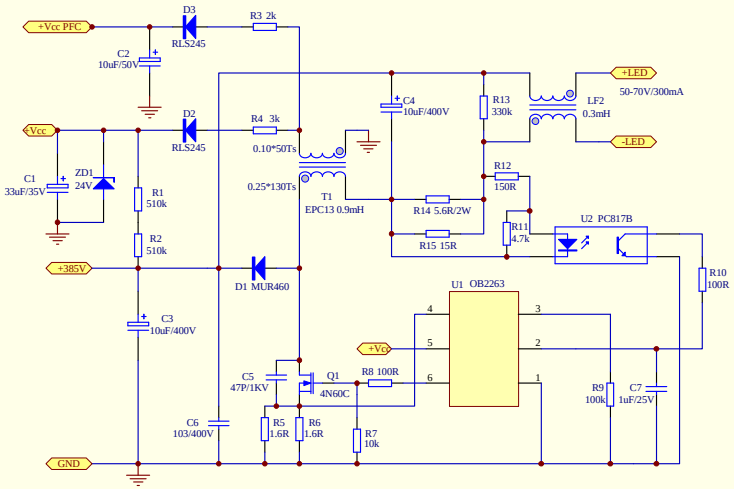

Title		
Size B	Number	Revision
Date: 18-Aug-2010	Sheet of	
File: E:\我的资料\DB资料\日光灯内置电源.DDB	Drawn By:	