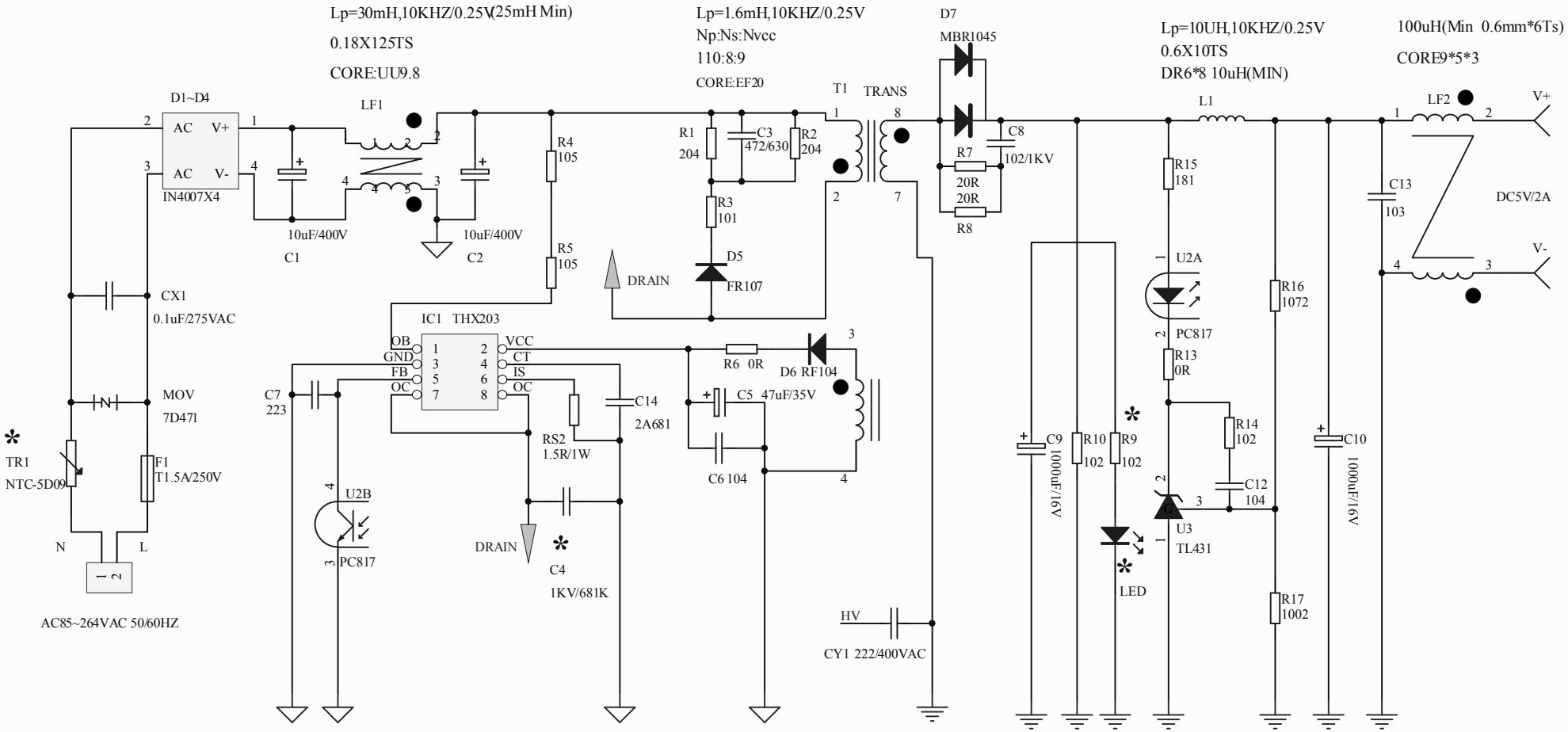

'*'NC

● 同名端

Title		
Size A4	Number	Revision A1
Date: 2013-11-6		Sheet of
File: C:\Documents and Settings\..\YS0502.Sch		Drawn By: