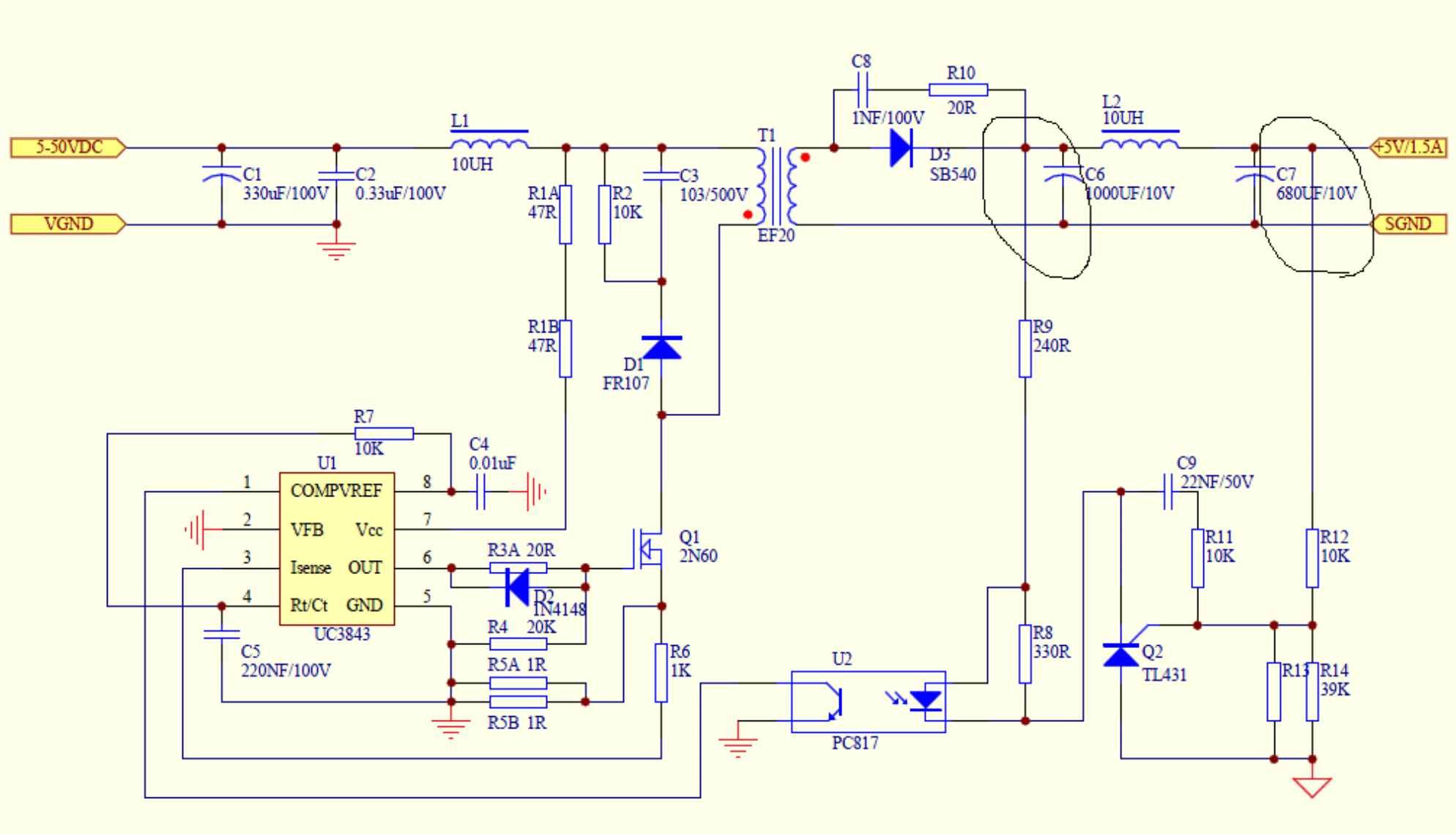
5-50VDC
VGND
C1
330uF/100V
C2
0.33uF/100V
L1
10UH
R1A
47R
R1B
47R
R2
10K
C3
103/500V
D1
FR107
T1
EF20
C8
1NF/100V
R10
20R
D3
SB540
L2
10UH
C6
1000UF/10V
C7
680UF/10V
+5V/1.5A
SGND
R9
240R
R7
10K
C4
0.01uF
U1
COMPVREF
VFB
Vcc
Isense
OUT
Rt/Ct
GND
UC3843
C5
220NF/100V
R3A 20R
D2
1N4148
R4 20K
R5A 1R
R5B 1R
Q1
2N60
R6
1K
U2
PC817
R8
330R
C9
22NF/50V
R11
10K
R12
10K
Q2
TL431
R13
R14
39K