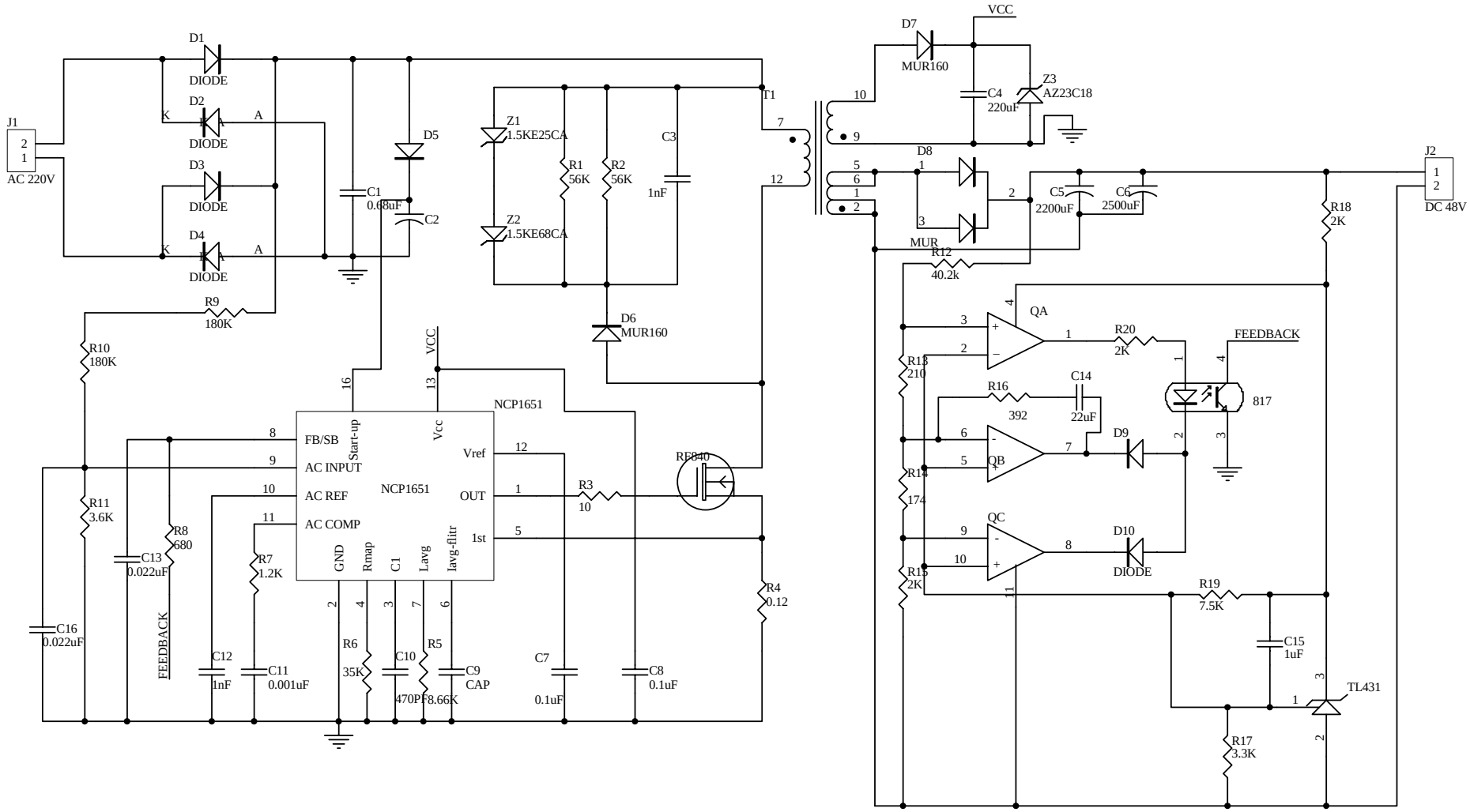
J1
AC 220V
D1
DIODE
D2
DIODE
D3
DIODE
D4
DIODE
K
A
D5
C1
0.68uF
C2
R9
180K
R10
180K
R11
3.6K
C13
0.022uF
R8
680
C16
0.022uF
FEEDBACK
R7
1.2K
C12
1nF
C11
0.001uF
Z1
1.5KE25CA
Z2
1.5KE68CA
R1
56K
R2
56K
C3
1nF
D6
MUR160
VCC
NCP1651
FB/SB
AC INPUT
AC REF
AC COMP
Start-up
Vcc
Vref
OUT
1st
GND
Rmap
C1
Lavg
Iavg-flitr
R6
35K
C10
470PF
R5
8.66K
C9
CAP
C7
0.1uF
C8
0.1uF
R3
10
RF840
R4
0.12
T1
D7
MUR160
VCC
C4
220uF
Z3
AZ23C18
D8
MUR
C5
2200uF
C6
2500uF
R12
40.2k
R18
2K
J2
DC 48V
QA
R20
2K
FEEDBACK
817
R13
210
R16
392
C14
22uF
QB
D9
R14
174
QC
D10
DIODE
R15
2K
R19
7.5K
C15
1uF
TL431
R17
3.3K