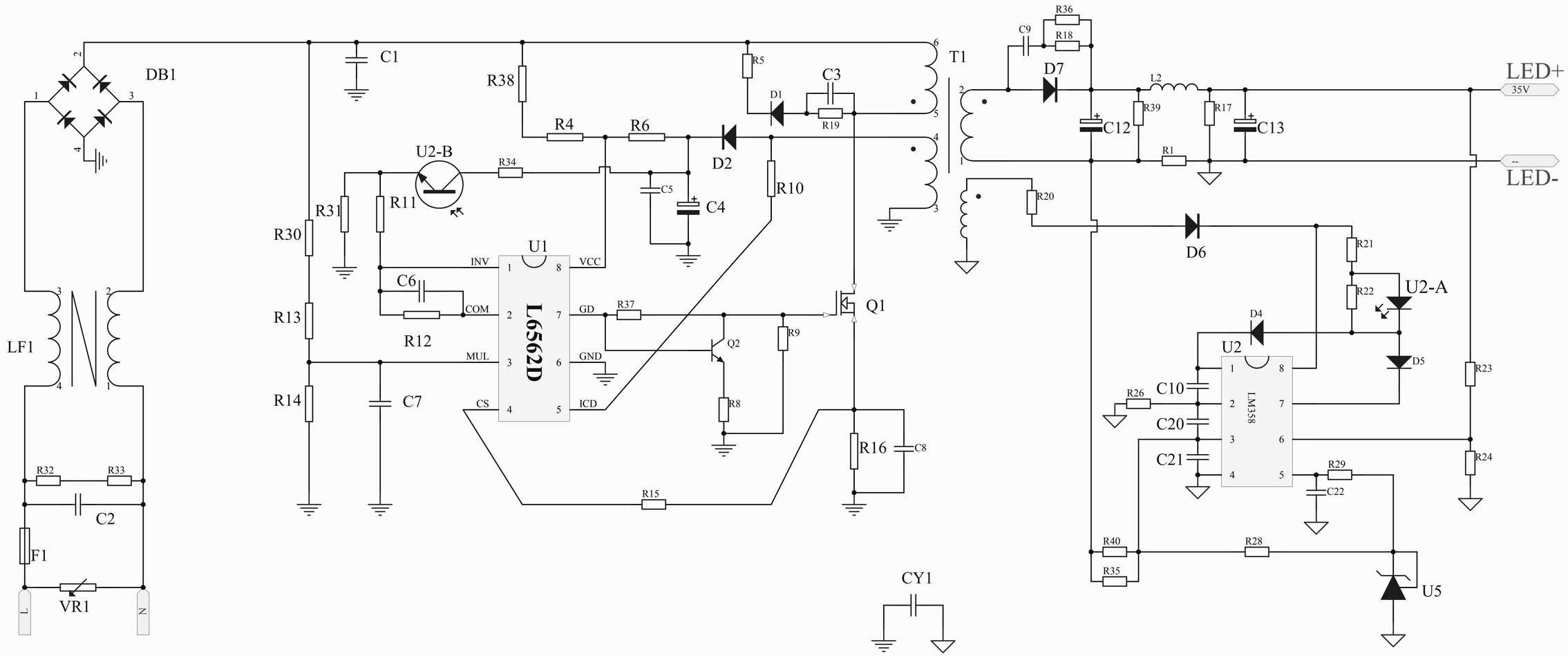

三防灯电源

Title		
Size B	Number	Revision
Date: 2010-5-6		Sheet of
File: F:\l6562D\..\LD6562D_SF.SCHDOC		Drawn By: