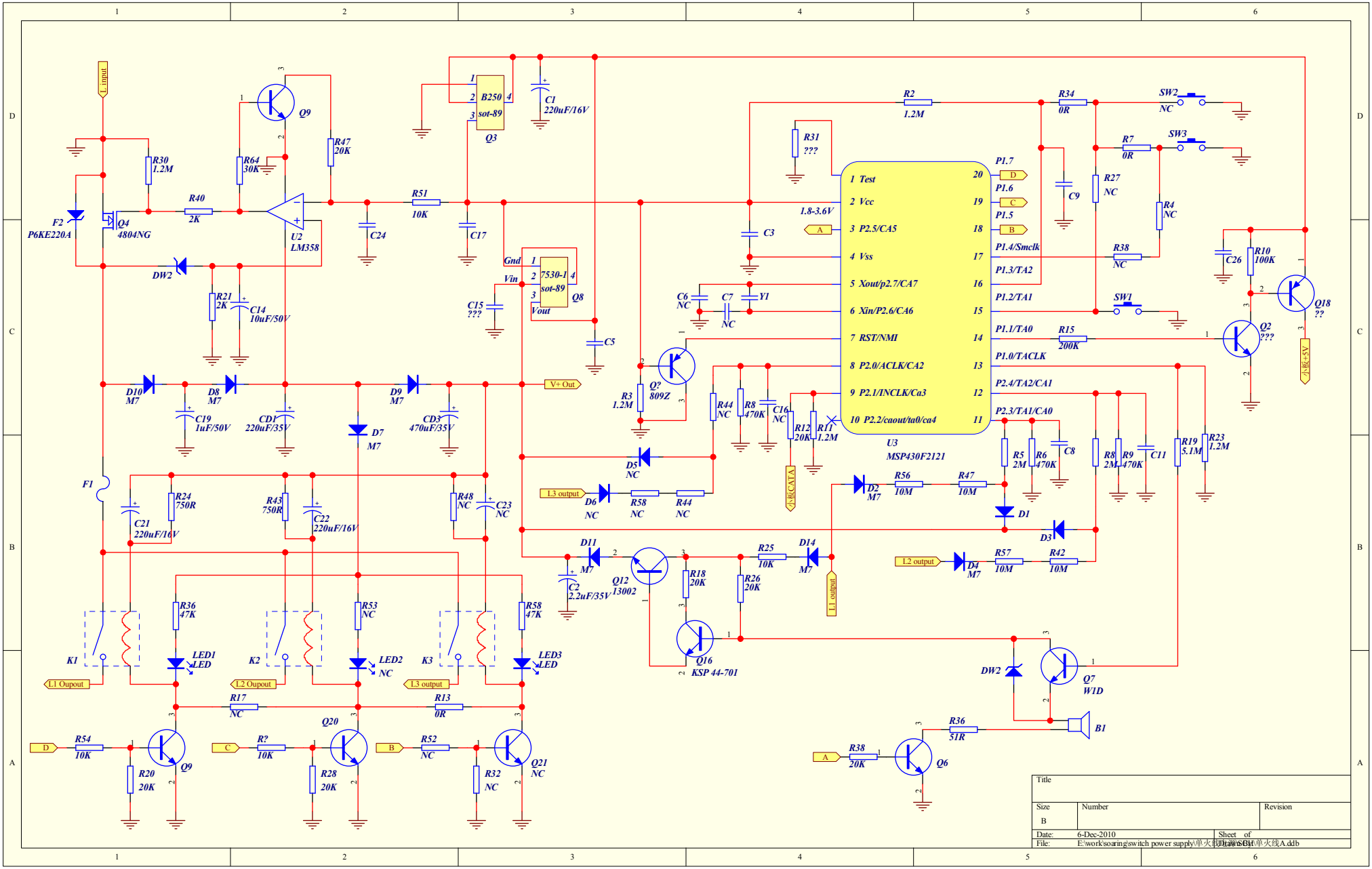
L input
F2
P6KE220A
Q4
4804NG
R30
1.2M
R40
2K
R64
30K
Q9
R47
20K
U2
LM358
DW2
R21
2K
C14
10uF/50V
C24
R51
10K
C17
B250
sot-89
Q3
C1
220uF/16V
Gnd
Vin
Vout
7530-1
sot-89
Q8
C15
???
C5
V+ Out
D10
M7
D8
M7
C19
1uF/50V
CD1
220uF/35V
D9
M7
CD3
470uF/35V
D7
M7
F1
C21
220uF/16V
R24
750R
R43
750R
C22
220uF/16V
R48
NC
C23
NC
K1
K2
K3
R36
47K
LED1
LED
R53
NC
LED2
NC
R58
47K
LED3
LED
L1 Oupout
L2 Oupout
L3 output
R17
NC
R13
0R
D
R54
10K
R20
20K
Q9
C
R?
10K
Q20
R28
20K
B
R52
NC
R32
NC
Q21
NC
R2
1.2M
R31
???
1.8-3.6V
A
C3
C6
NC
C7
NC
Y1
Q?
809Z
R3
1.2M
R44
NC
R8
470K
C16
NC
R12
20K
R11
1.2M
D5
NC
L3 output
D6
NC
R58
NC
R44
NC
1 Test
2 Vcc
3 P2.5/CA5
4 Vss
5 Xout/p2.7/CA7
6 Xin/P2.6/CA6
7 RST/NMI
8 P2.0/ACLK/CA2
9 P2.1/INCLK/Ca3
10 P2.2/caout/ta0/ca4
20 P1.7
19 P1.6
18 P1.5
17 P1.4/Smclk
16 P1.3/TA2
15 P1.2/TA1
14 P1.1/TA0
13 P1.0/TACLK
12 P2.4/TA2/CA1
11 P2.3/TA1/CA0
U3
MSP430F2121
D
C
B
A
R34
0R
SW2
NC
R7
0R
SW3
R27
NC
C9
R4
NC
R38
NC
SW1
R15
200K
C26
R10
100K
Q18
??
Q2
???
V+Rg+5V
R5
2M
R6
470K
C8
R8
2M
R9
470K
C11
R19
5.1M
R23
1.2M
D2
M7
R56
10M
R47
10M
D1
D3
L2 output
D4
M7
R57
10M
R42
10M
D11
M7
C2
2.2uF/35V
Q12
13002
R18
20K
R25
10K
D14
M7
R26
20K
L1 output
Q16
KSP 44-701
DW2
Q7
W1D
B1
R36
51R
R38
20K
Q6
Title
Size
B
Number
Revision
Date: 6-Dec-2010
File: E:\work\soaring\switch power supply\单火线\单火线A.ddb
Sheet of
Drawn By: