TOP255LN 36W

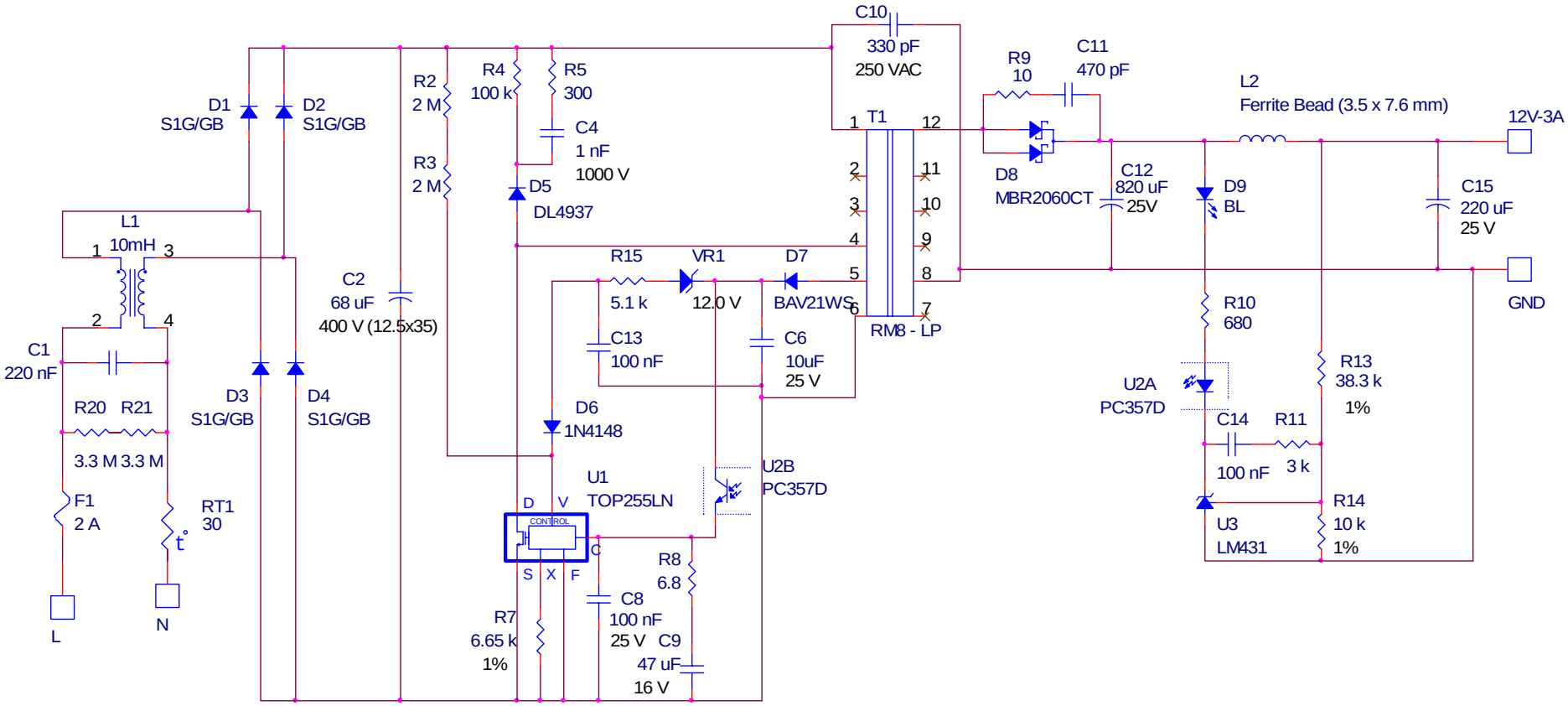

20090611