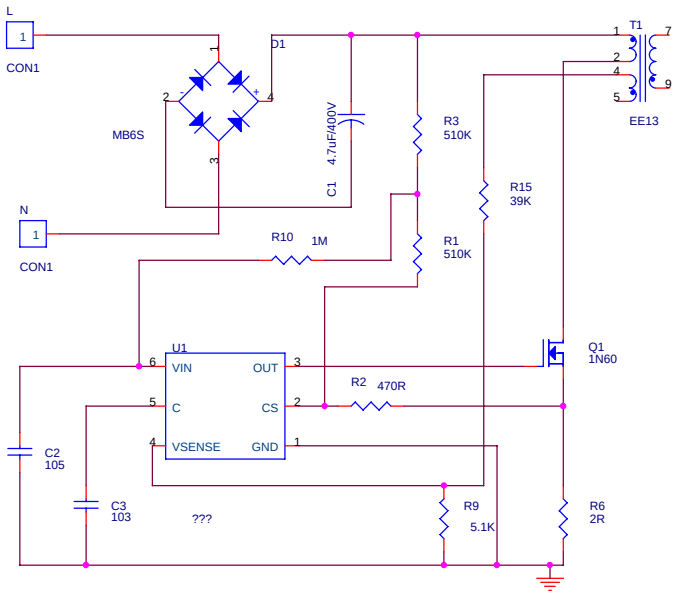

Title <Title>		
Size A4	Document Number <Doc>	Rev <RevCode>
Date: Wednesday, December 15, 2010	Sheet 1 of 1	