REVISIONS			
REV	DCN	DATE	APPR

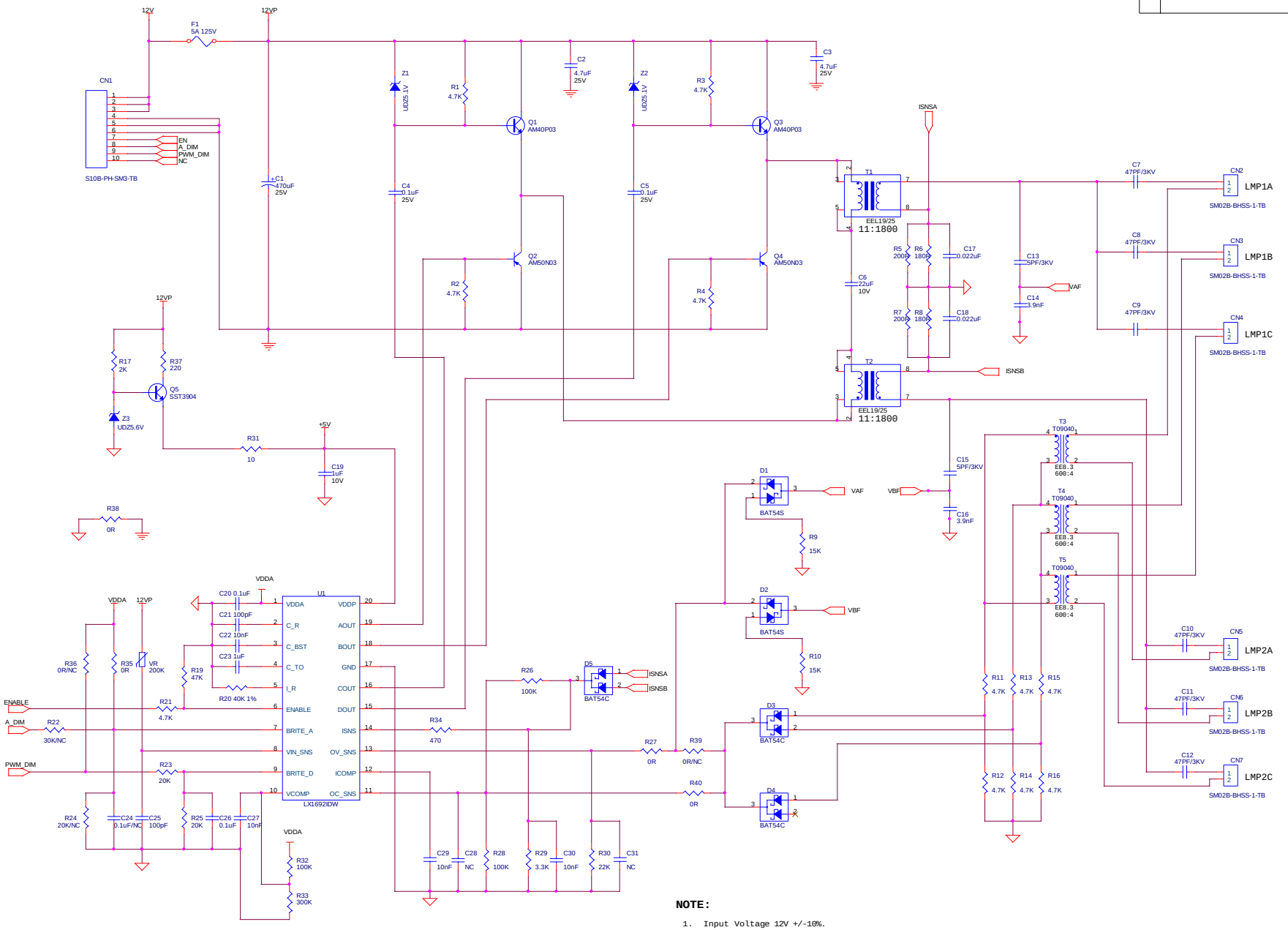

NOTE:

1. Input Voltage 12V +/-10%.
2. Nominal output 30W.
3. Target lamp operating at 770V, 6.5mA maximum.
4. Inverter on when Enable>1.5V, off when Enable<0.5V.
5. Analog dimming when VPWM_DIM>2.5V and a DC signal applied to A_DIM pin,
   Lamp current maximum when VA_DIM = 5V,
   Lamp current minimum when VA_DIM = 0V.
6. Burst dimming when VPWM_DIM is between 1V and 5V, 5V set 100% duty and 1V 0% duty.

CONFIDENTIAL

Zenitron Corporation		
Title	Lx1692 based 6 CCFL Inverter for Monitor	
Size C	Document Number <Doc>	Rev 0
Date: Thursday, September 07, 2006	Sheet 1 of 1	