E27 LED for 50V/160mA
TEST REPORT

Input voltage range: 180~264Vac

Output voltage & current :50V/160mA

Date(s) of Test: 2010/12/30

APPROVED BY:	CHECKED BY:	PAPERED BY:
Rex Peng	***Mars Cho***	***LIVIAN YUAN***

Copy Right © 2010, Shamrock Micro Device Corp.

CHECK LIST

NO	TEST ITEM	Pass/Fail	PAGE
	Information		
1	Schematic Circuit		3
2	Circuit Board Photograph		4
3	Bill of Material		5
4	Transformer Drawing		6
	Test Report		
1	Input Current & Line Regulation	Pass	7
2	P.F (Power Factor)	Pass	8
3	Efficiency	Pass	9
4	Ripple And Noise	Pass	10-11
5	Over Shoot	Pass	12-13
6	Rise time	Pass	14-15
7	Voltage Derating	Pass	16-17
8	Temperature Rise Test	Pass	18

Copy Right © 2010, Shamrock Micro Device Corp.

1.Schematic Circuit

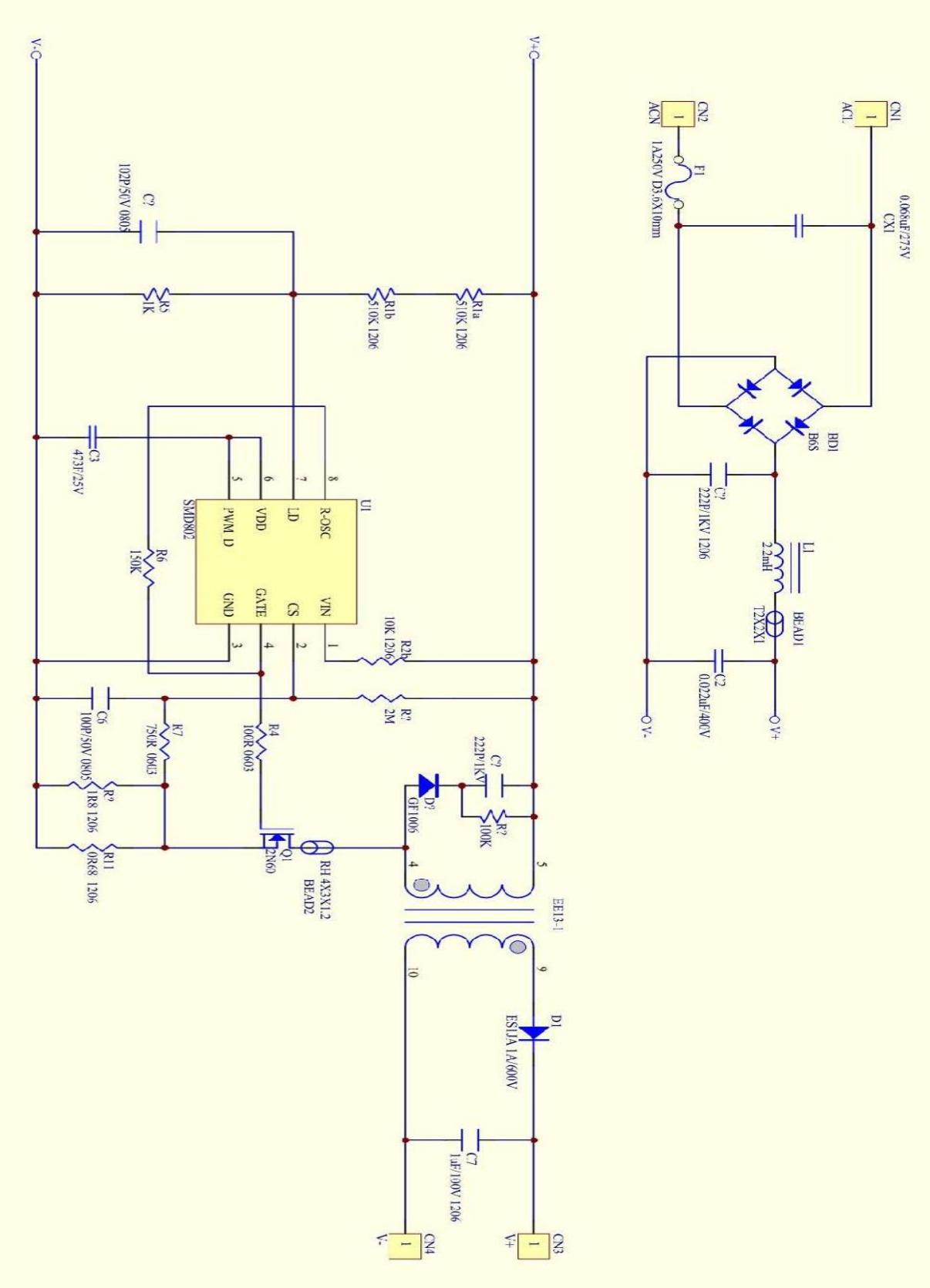

Copy Right © 2010, Shamrock Micro Device Corp.

2.Circuit Board Photograph

Top

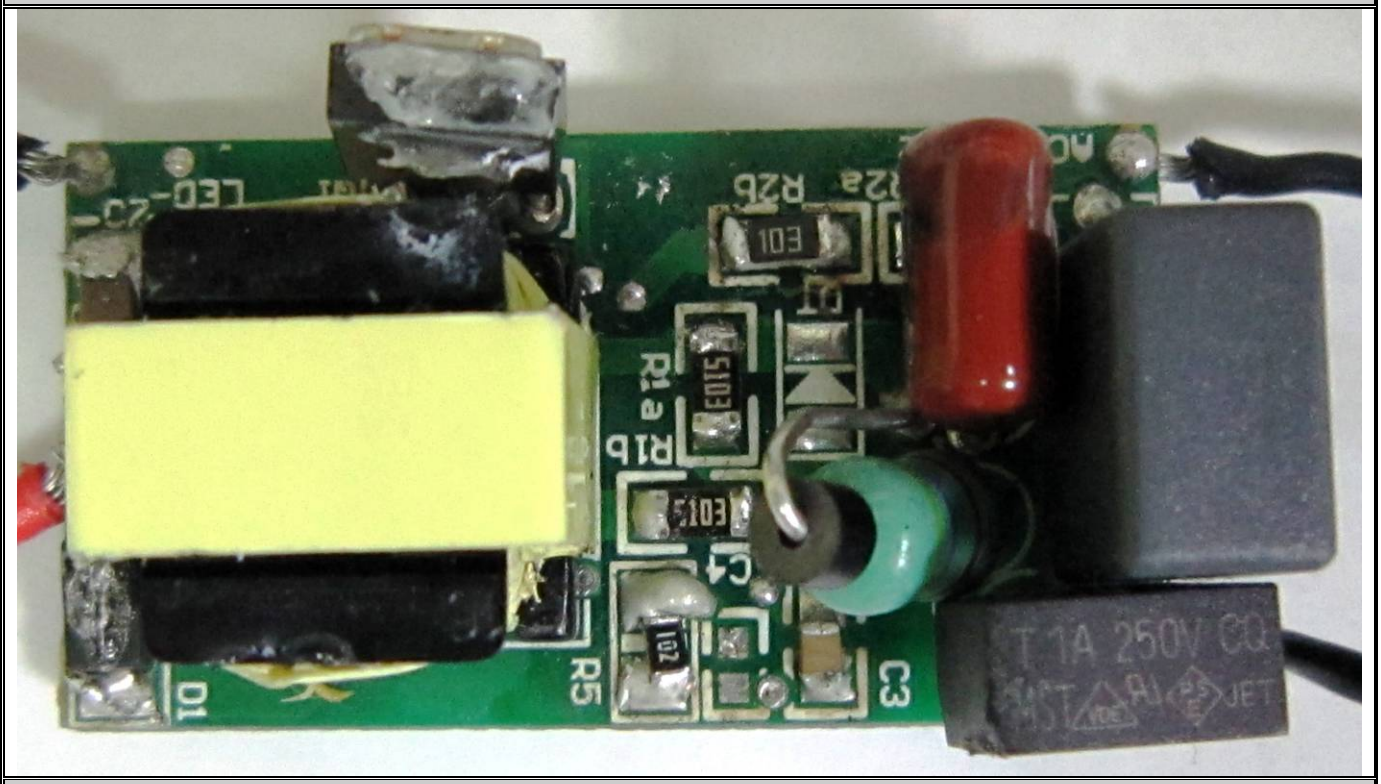

Bottom

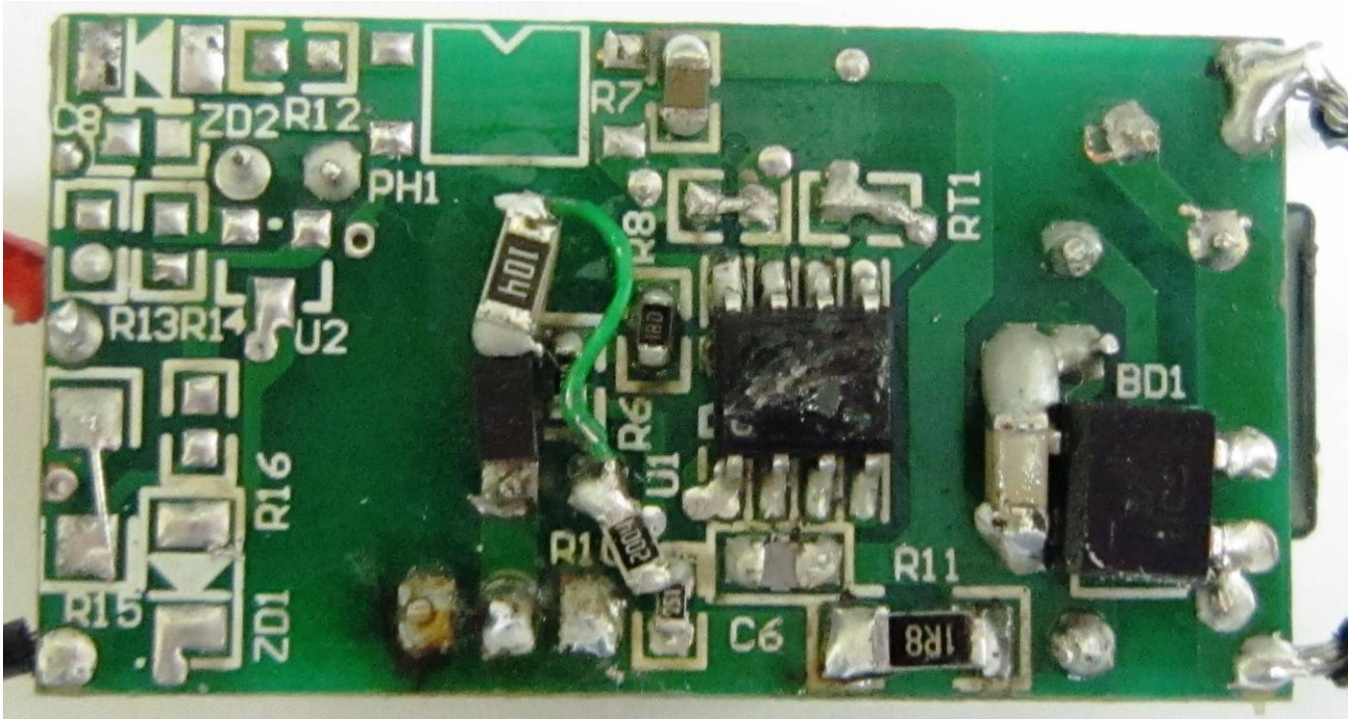

Copy Right © 2010, Shamrock Micro Device Corp.

3.Bill of Material

NO	Location	Part Value	Specifications	Manufacturer
1	BD1	B6S	600V/1A-Bridge MB-S	PANJIT
2	C?	102P/50V	SMD-0805- Capacitor	Kamaya
3	C2	0.022uF/400V	7.5MM- MPP Capacitor	HJC
4	C3	473F/25V	SMD-0805- Capacitor	Kamaya
5	C6	100P/50V	SMD-0805- Capacitor	Kamaya
6	C7	1uF/100V	SMD-1206- Capacitor	Kamaya
7	CX1	0.068uF/275V	10MM- X2 Capacitor	HJC
8	D?	GS1006	800V/1A-SOD123	PANJIT
9	D1	ES1JA	1A/600V-Superfast Diode	PANJIT
10	F1	1A/250V	1A/250V -FUSE	Belfuse
11	L1	2.2mH		3L
12	Q1	2SK2865	2A/600V-TO252	TOSHIBA
13	R1a	510K	SMD-1206- Resistance	Kamaya
14	R1b	510K	SMD-1206- Resistance	Kamaya
15	R2b	10K	SMD-1206- Resistance	Kamaya
16	R?	1R8	SMD-1206- Resistance	Kamaya
17	R4	100R	SMD-0603- Resistance	Kamaya
18	R5	1K	SMD-1206- Resistance	Kamaya
19	R7	750R	SMD-0603- Resistance	Kamaya
20	R8	150K	SMD-0603- Resistance	Kamaya
21	R11	0R68	SMD-1206- Resistance	Kamaya
22	U1	SMD802	SO-8	SMD
23	T1	2.2mH	EE13	

Copy Right © 2010, Shamrock Micro Device Corp.

4. Transformer Drawing

BOBBIN : EE13(DIP 10PIN) (樹林編號)
CORE ： 3C90，PC40
所有輸出入線均需加套管
感量 ： PIN4-PIN5 = 2.2mH

N3： FF － 5F	0.17mm X 1 X 30T
N2： 9S －10F	0.16mm X 1 X 94T (三層絕緣線)
N1： 4S － FF	0.17mm X 1 X 150T

Copy Right © 2010, Shamrock Micro Device Corp.

1. Input Current & Line Regulation

Test Condition:

TEST BY: LIVIAN TEST DATE: 2010/12/29

Input Voltage	180/230/264VAC
Input Frequency	50Hz
Output Load	50V/160mA
Ambient Temperature	25℃

Setup Diagram:

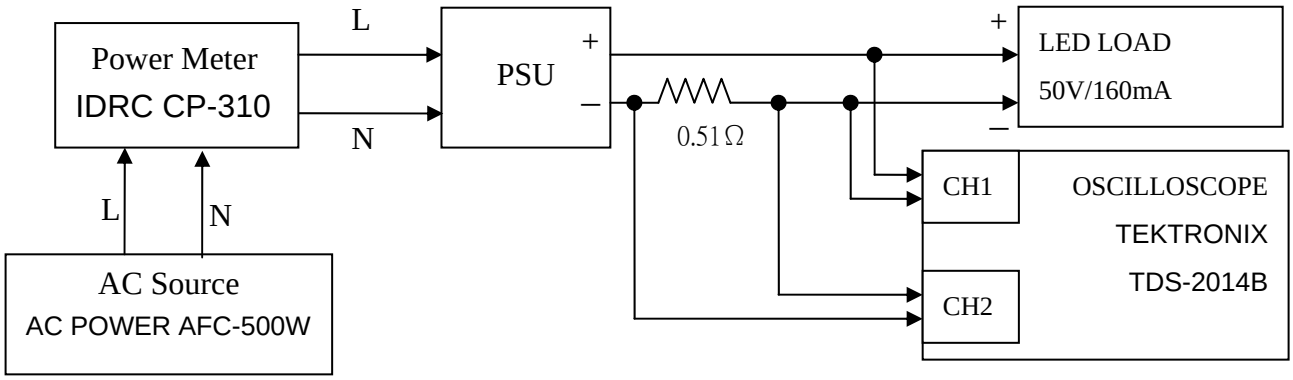

Test Result:

Input Voltage	Input Current (mA)	Test Specifications(mA)	Pass/Fail
180V/50Hz	43	≦100	Pass
230V/50Hz	46		Pass
264V/50Hz	44		Pass

Input Voltage	Output Voltage (V)	Output t Current (mA)	Test Specifications(mA)		Pass/Fail
180V/50Hz	54.1	120.76	----		----
230V/50Hz	55.8	159.23	144	176	Pass
264V/50Hz	55.9	162.12	----		----

★Output t Current= Oscilloscope CH2 Voltage / 0.51

Copy Right © 2010, Shamrock Micro Device Corp.

2. P.F (Power Factor)

Test Condition:

TEST BY: LIVIAN TEST DATE: 2010/12/29

Input Voltage	180/230/264VAC
Input Frequency	50Hz
Output Load	50V/160mA
Ambient Temperature	25℃

Setup Diagram:

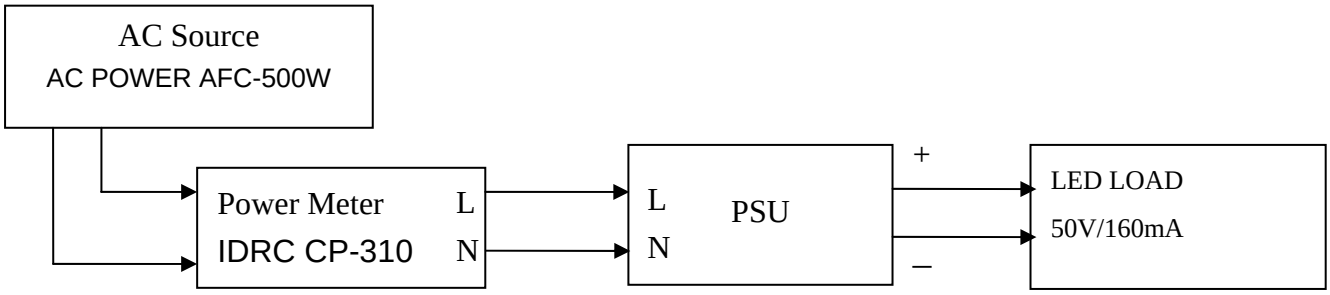

Test Result:

Item	Input Voltage	P.F (Power Factor)	Test Specifications	Pass/Fail
T8	180V/50Hz	0.982	≧0.9	Pass
	230V/50Hz	0.965		Pass
	264V/50Hz	0.914		Pass

Copy Right © 2010, Shamrock Micro Device Corp.

3. Efficiency

Test Condition:

TEST BY: LIVIAN TEST DATE: 2010/12/29

Input Voltage	180/230/264VAC
Input Frequency	50Hz
Output Load	50V/160mA
Ambient Temperature	25℃

Setup Diagram:

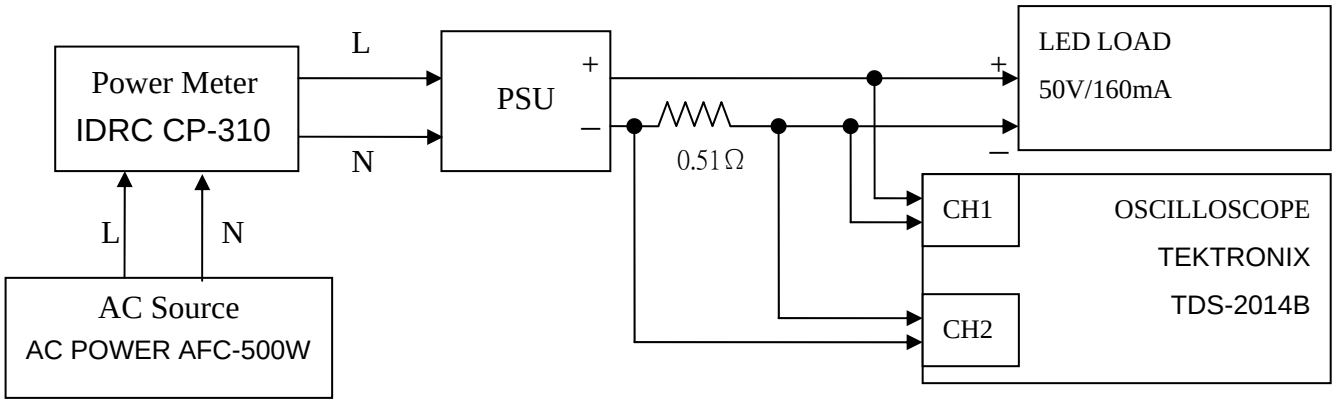

Test Result:

Item	*Input Voltage*	Input(W)	Output(W)	Efficiency	*Test Specifications*	Pass/Fail
T8	180V/50Hz	7.5	6.53	87.11%	≧85%	Pass
	230V/50Hz	10.2	8.89	87.11%		Pass
	264V/50Hz	10.6	8.92	85.49%		Pass

★**Output watts=output voltage x output current**

★**Efficiency= output watts / Input watts**

Copy Right © 2010, Shamrock Micro Device Corp.

4. Ripple And Noise

Test Condition:

TEST BY: LIVIAN TEST DATE: 2010/12/30

Input Voltage	180/230/264VAC
Input Frequency	50Hz
Output Load	50V/160mA
Ambient Temperature	25℃

Setup Diagram:

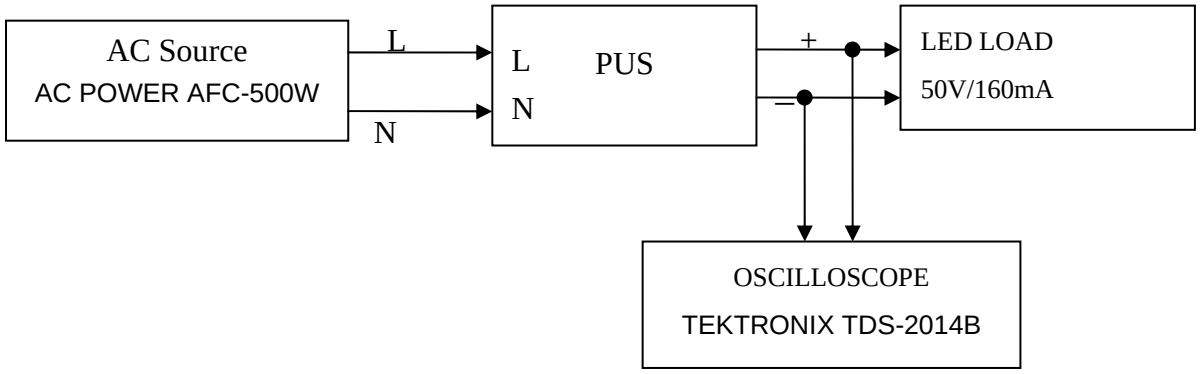

Test Result:

Test Picture	Input Voltage	Measured (Vp-p)	*Test Specifications*	Pass/Fail
Pic.4-1	180V/50Hz	17.8	≦20V	Pass
Pic.4-2	230V/50Hz	18.6		Pass
Pic.4-3	264V/50Hz	18.4		Pass

Copy Right © 2010, Shamrock Micro Device Corp.

Test Waveform:

Pic.4-1 Vin=180Vac/50Hz	Pic.4-2 Vin=230Vac/50Hz
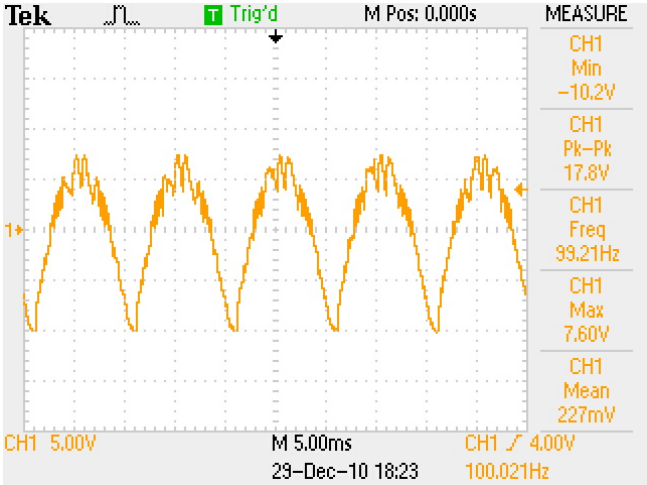	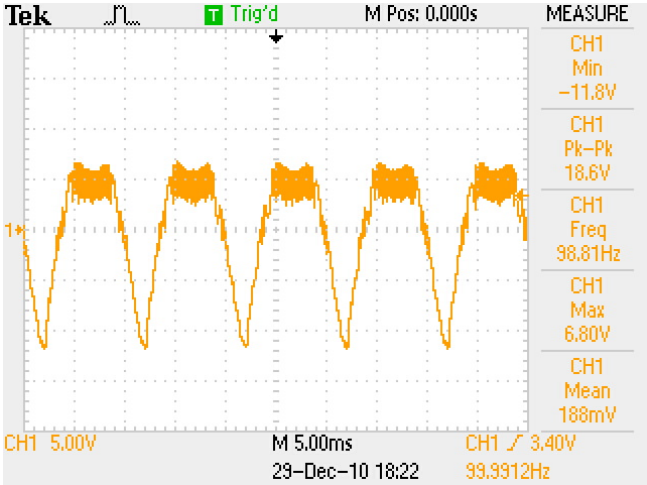
Pic.4-3 Vin=264Vac/50Hz	
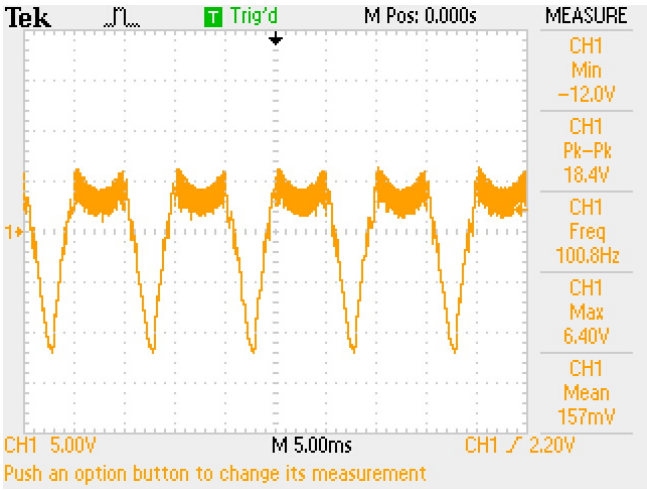	

Copy Right © 2010, Shamrock Micro Device Corp.

5. Over Shoot

Test Condition:

TEST BY: LIVIAN TEST DATE: 2010/12/30

Input Voltage	180/230/264VAC
Input Frequency	50Hz
Output Load	50V/160mA
Ambient Temperature	25℃

Setup Diagram:

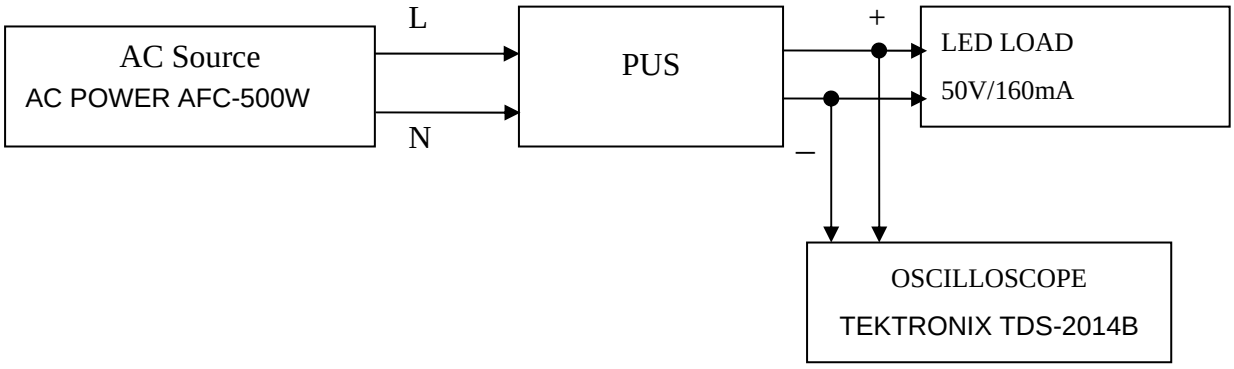

Test Result:

Test Picture	Input Voltage	Max Vout (V)	*Test Specifications*	Pass/Fail
Pic.5-1	180V/50Hz	64.4	≦70V	Pass
Pic.5-2	230V/50Hz	64.0		Pass
Pic.5-3	264V/50Hz	64.8		Pass

Copy Right © 2010, Shamrock Micro Device Corp.

Test Waveform:

Pic.5-1 Vin=180Vac/50Hz	Pic.5-2 Vin=230Vac/50Hz
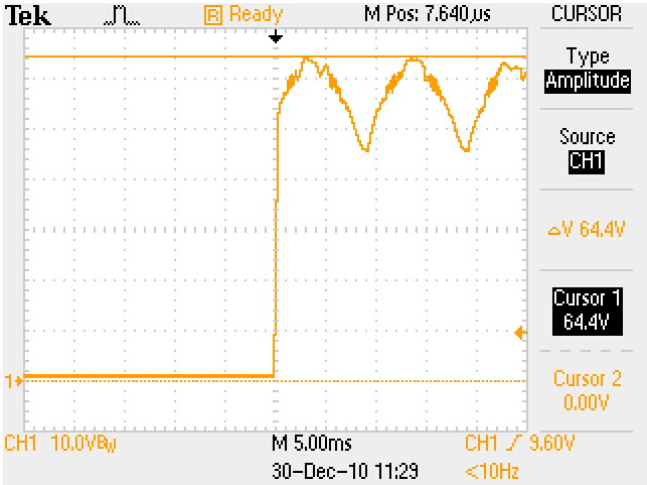	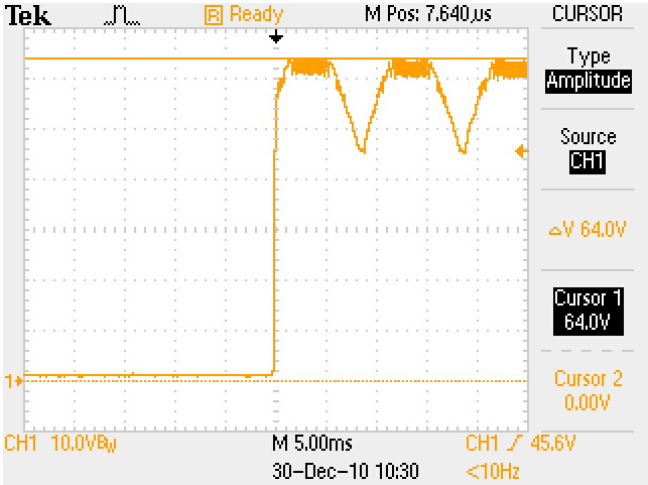
Pic.5-3 Vin=264Vac/50Hz	
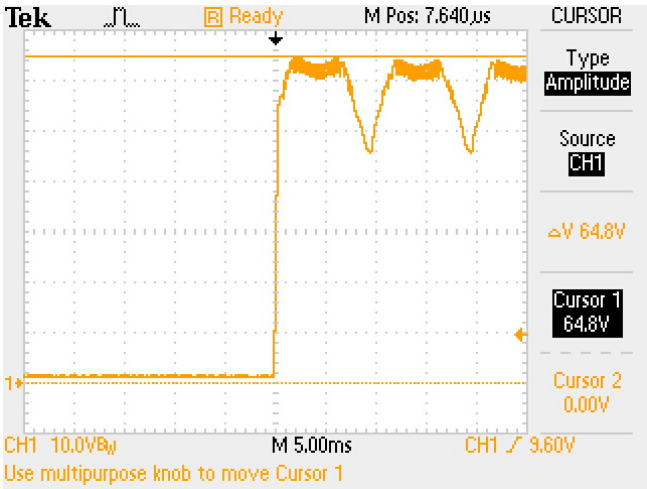	

Copy Right © 2010, Shamrock Micro Device Corp.

6. Rise Time

Test Condition:

TEST BY: LIVIAN TEST DATE: 2010/12/30

Input Voltage	180/230/264VAC
Input Frequency	50Hz
Output Load	50V/160mA
Ambient Temperature	25℃

Setup Diagram:

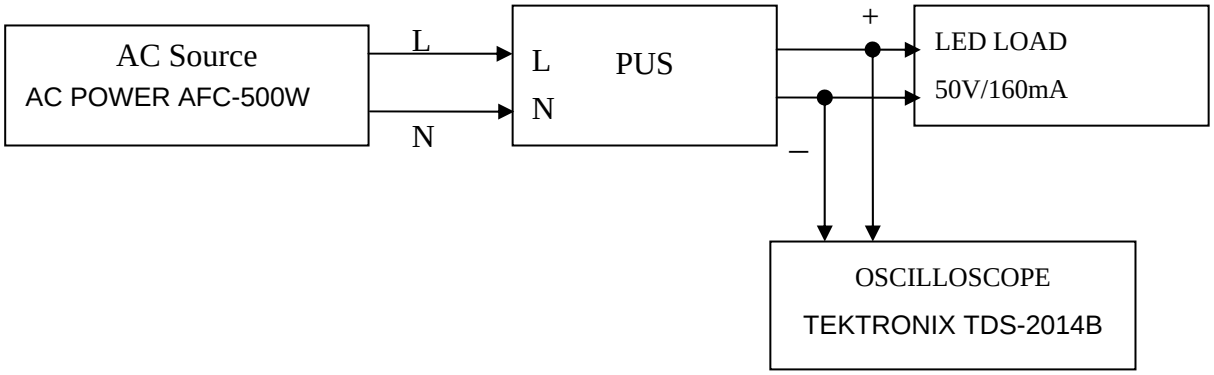

Test Result:

Test Picture	Input Voltage	Measured (ms)	*Test Specifications*	Pass/Fail
Pic.6-1	100V/60Hz	**0.29**	≦10mS	Pass
Pic.6-2	115V/60Hz	**1.32**		Pass
Pic.6-3	130V/60Hz	**0.84**		Pass

Copy Right © 2010, Shamrock Micro Device Corp.

Test Waveform:

Pic.6-1 Vin=180Vac/50Hz	Pic.6-2 Vin=230Vac/50Hz
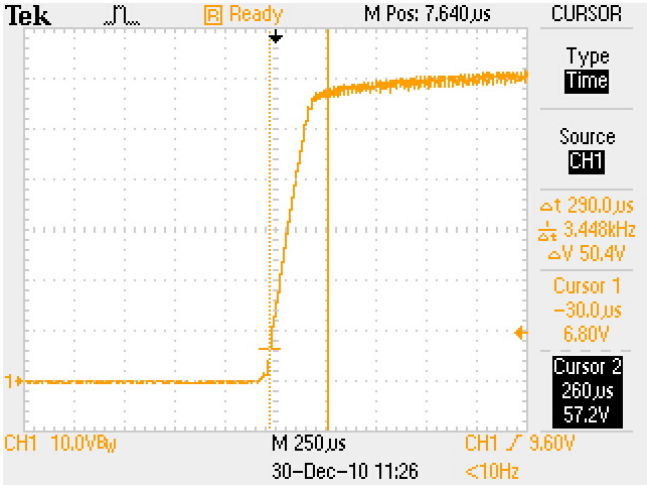	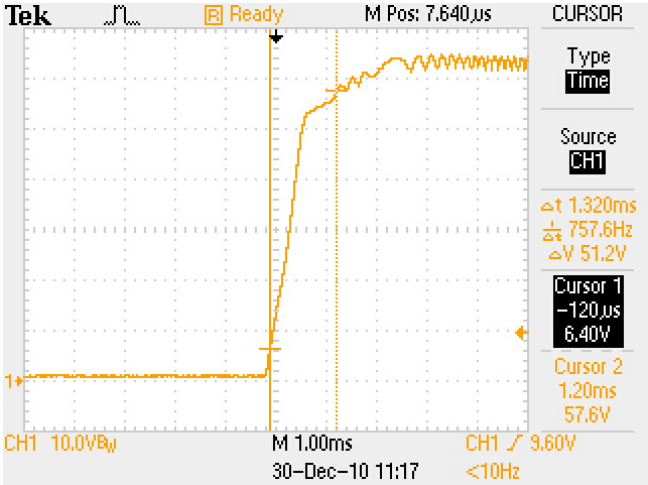
Pic.6-3 Vin=264Vac/50Hz	
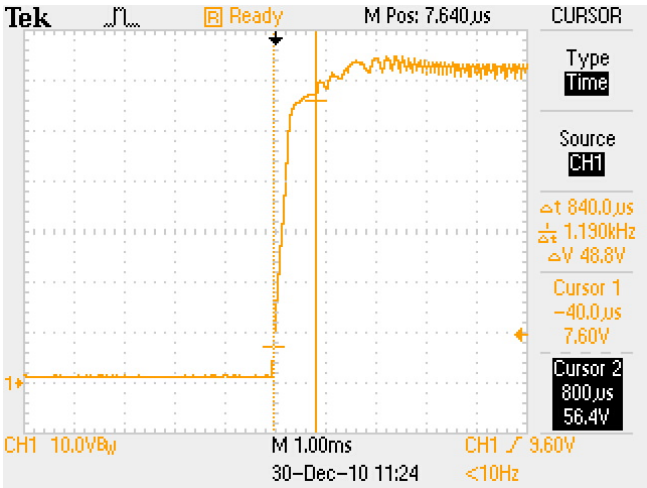	

Copy Right © 2010, Shamrock Micro Device Corp.

7. Voltage Derating

Test Condition:

TEST BY: LIVIAN TEST DATE: 2010/12/30

Input Voltage	264VAC
Input Frequency	50Hz
Output Load	50V/160mA
Ambient Temperature	25℃

Test Results:

Test Picture	Part No.	Rating	Measurement Value	Rating (%)	SPEC	Pass/Fail
Pic.7-1	U1	Max rating: 520V	372	71.54%	90%	PASS
Pic.7-2	Q1	Max rating: 600V	544	90.66%	95%	PASS
Pic.7-3	D1	Max rating: 600V	348	58%	80%	PASS

Copy Right © 2010, Shamrock Micro Device Corp.

Test Waveform:

Pic.7-1 (U1) Vin=264Vac/50Hz	Pic.7-2 (Q1)Vin=264Vac/50Hz
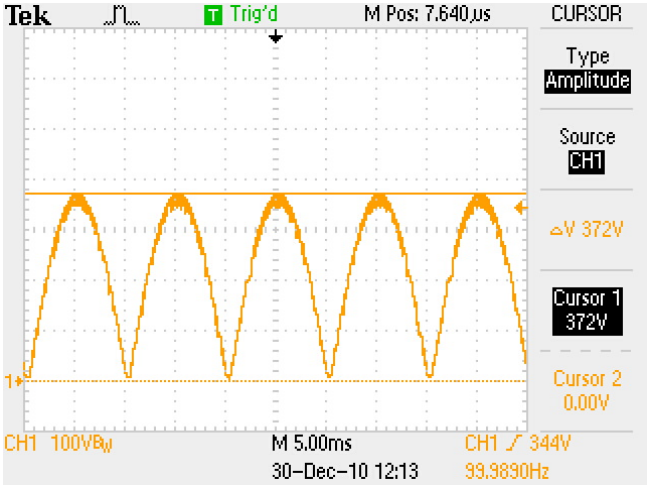	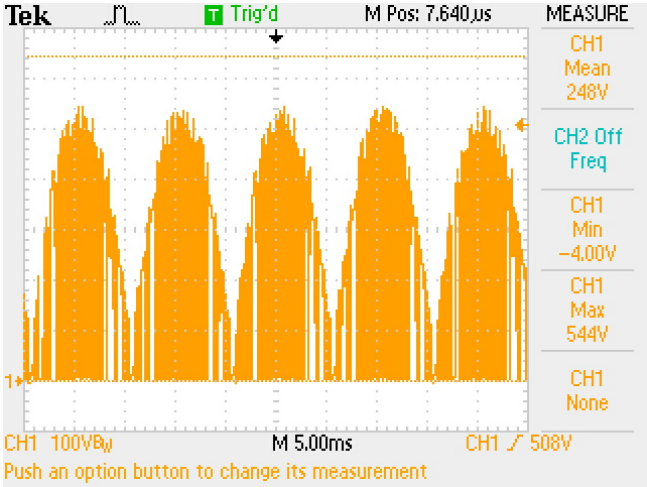
Pic.7-3(D1) Vin=265Vac/50Hz	
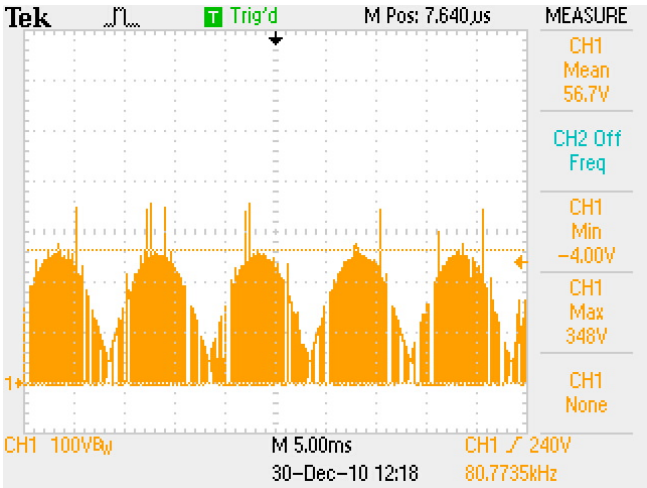	

Copy Right © 2010, Shamrock Micro Device Corp.

8. TEMPERATURE RISE TEST

Test Condition:

TEST BY: LIVIAN TEST DATE: 2010/12/29

Input Voltage	230VAC
Input Frequency	50Hz
Output Load	50V/160mA
Ambient Temperature	25℃

Setup Diagram:

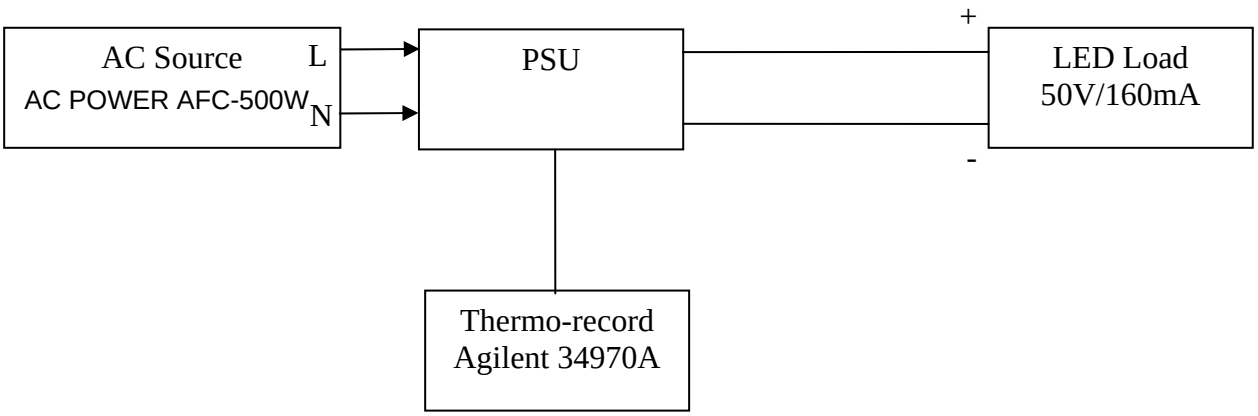

Test Results:

No	Location	Description	230 /5Hz (25℃)		
			Tc(℃) 2HR	*Specifications*	Pass/Fail
1	U1	SMD802	75.8	125	Pass
2	Q2	2N60	77.0	150	Pass
3	T1-CORE	EE13	67.2	110	Pass
4	T1-WIRE	EE13	67.7	110	Pass
5	L1	2.2mH	50.2	150	Pass
7	D1	ES1JA	58.8	150	Pass
8	BD1	B6S	50.6	125	Pass

Copy Right © 2010, Shamrock Micro Device Corp.