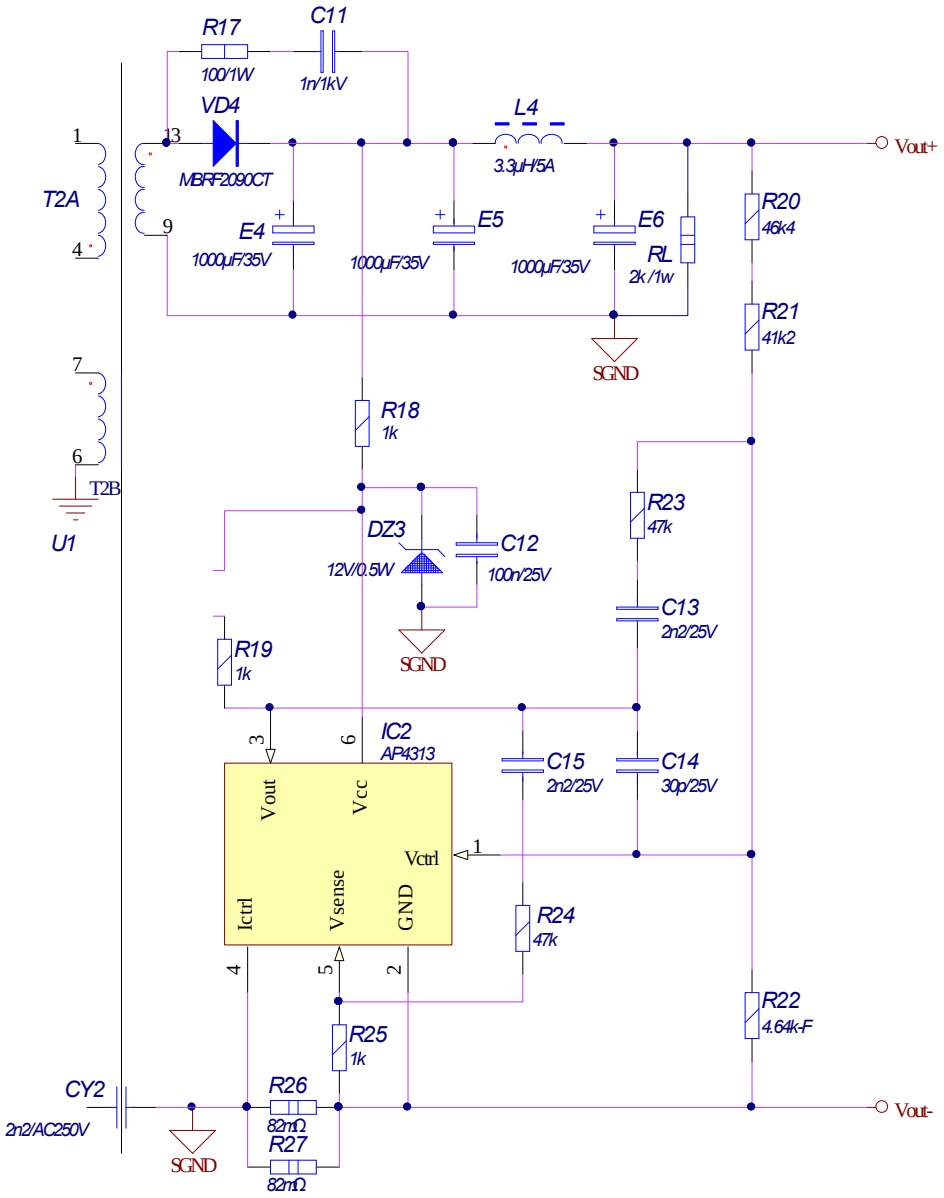
R17
100/1W
C11
1n/1kV
VD4
MBRF2090CT
L4
3.3μH/5A
Vout+
T2A
1
13
9
4
E4
1000μF/35V
E5
1000μF/35V
E6
1000μF/35V
RL
2k/1w
R20
46k4
R21
41k2
SGND
7
6
T2B
U1
R18
1k
DZ3
12V/0.5W
C12
100n/25V
R23
47k
C13
2n2/25V
R19
1k
IC2
AP4313
3
6
Vout
Vcc
Vctrl
1
Ictrl
Vsense
GND
4
5
2
C15
2n2/25V
C14
30p/25V
R24
47k
R22
4.64k-F
R25
1k
CY2
2n2/AC250V
R26
82mΩ
R27
82mΩ
Vout-