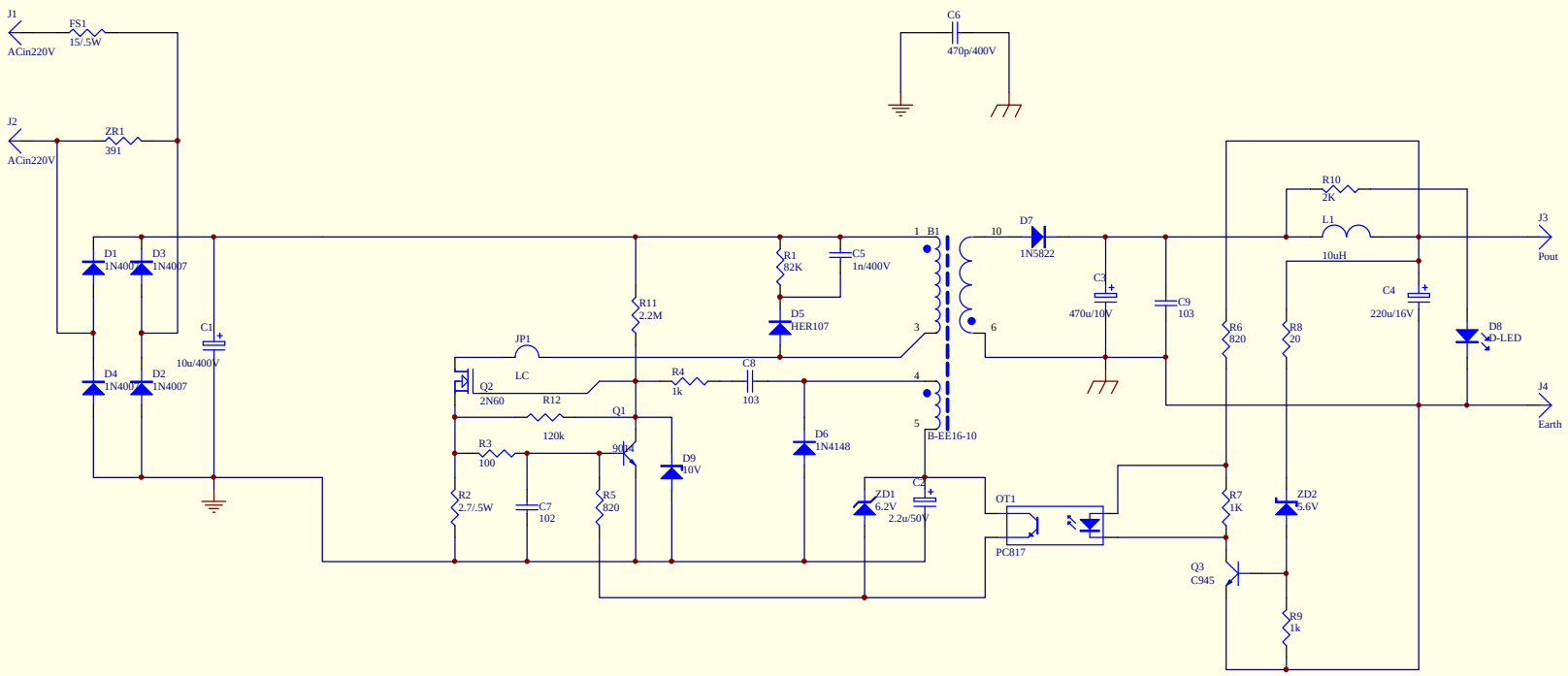

Title		
Size B	Number	Revision
Date: 14-Apr-2011	Sheet of	
File: F:\我的资料\..\通用MOS适配器M615.Sch	Drawn By:	