CC1_S V1.0.sch-1 - Thu May 26 13:40:56 2011

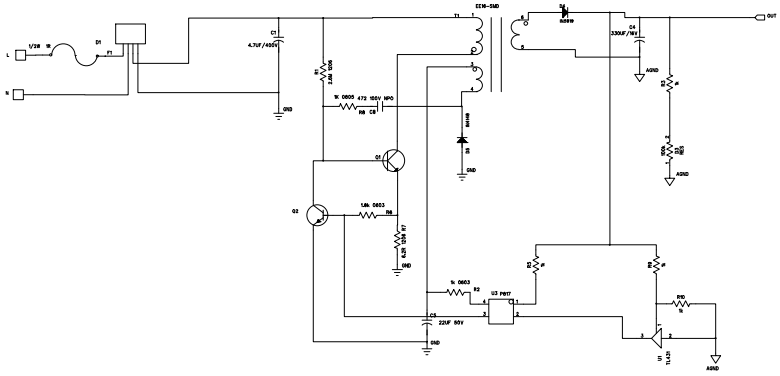

REVISION RECORD			
LTR	ECO NO:	APPROVED:	DATE:

DRAWN:	DATE:	COMPANY:			
CHECKED:	DATE:	TITLE:			
QUALITY CONTROL:	DATE:	CODE:	SIZE:	DRAWING NO:	REV:
RELEASED:	DATE:	SCALE:		SHEET: OF	