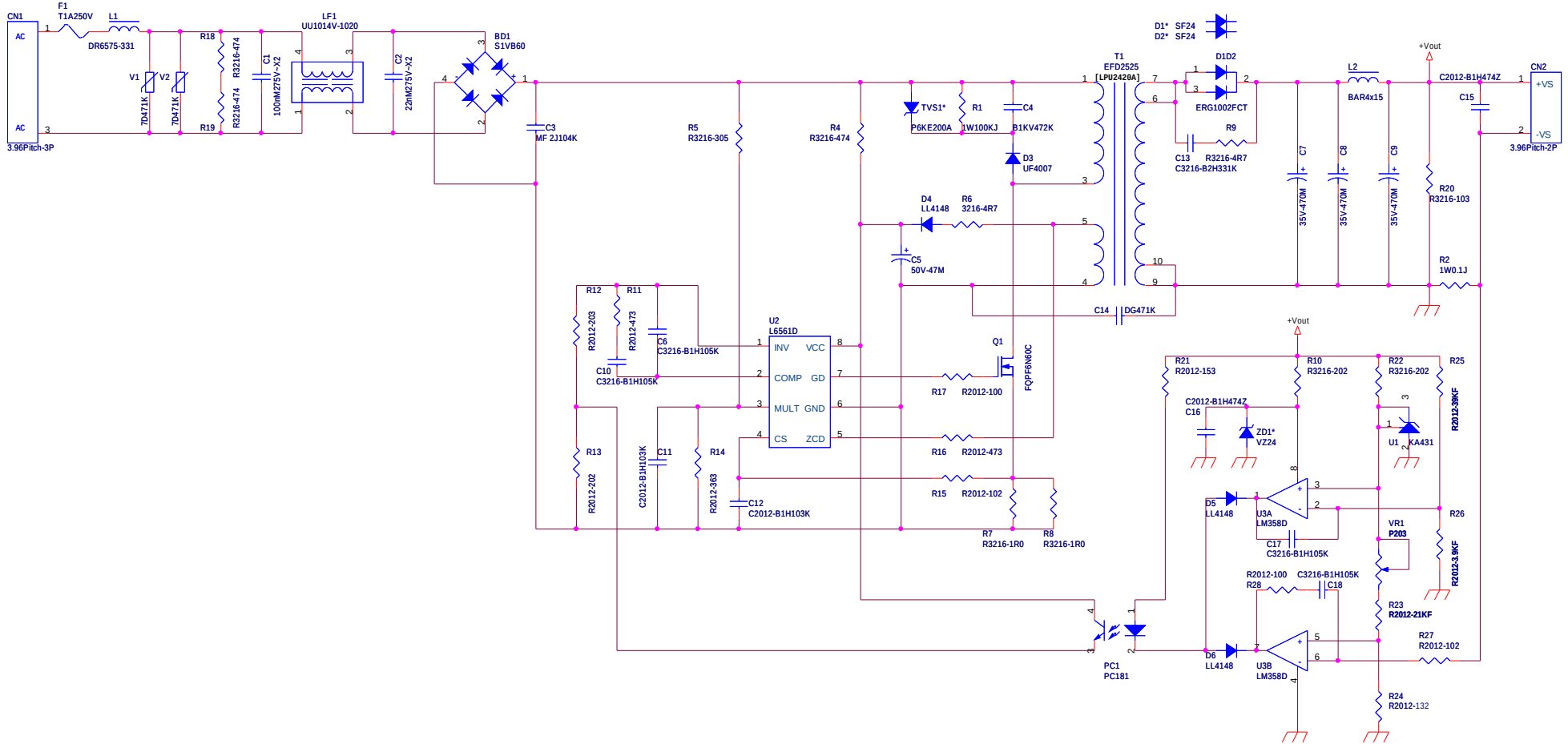

Title	LED PSU-24V-20W-AC	
Size A3	Document Number HES-LED PSU-20W-V02	Rev 00
Date: Monday, February 28, 2011	Sheet 1 of 1	