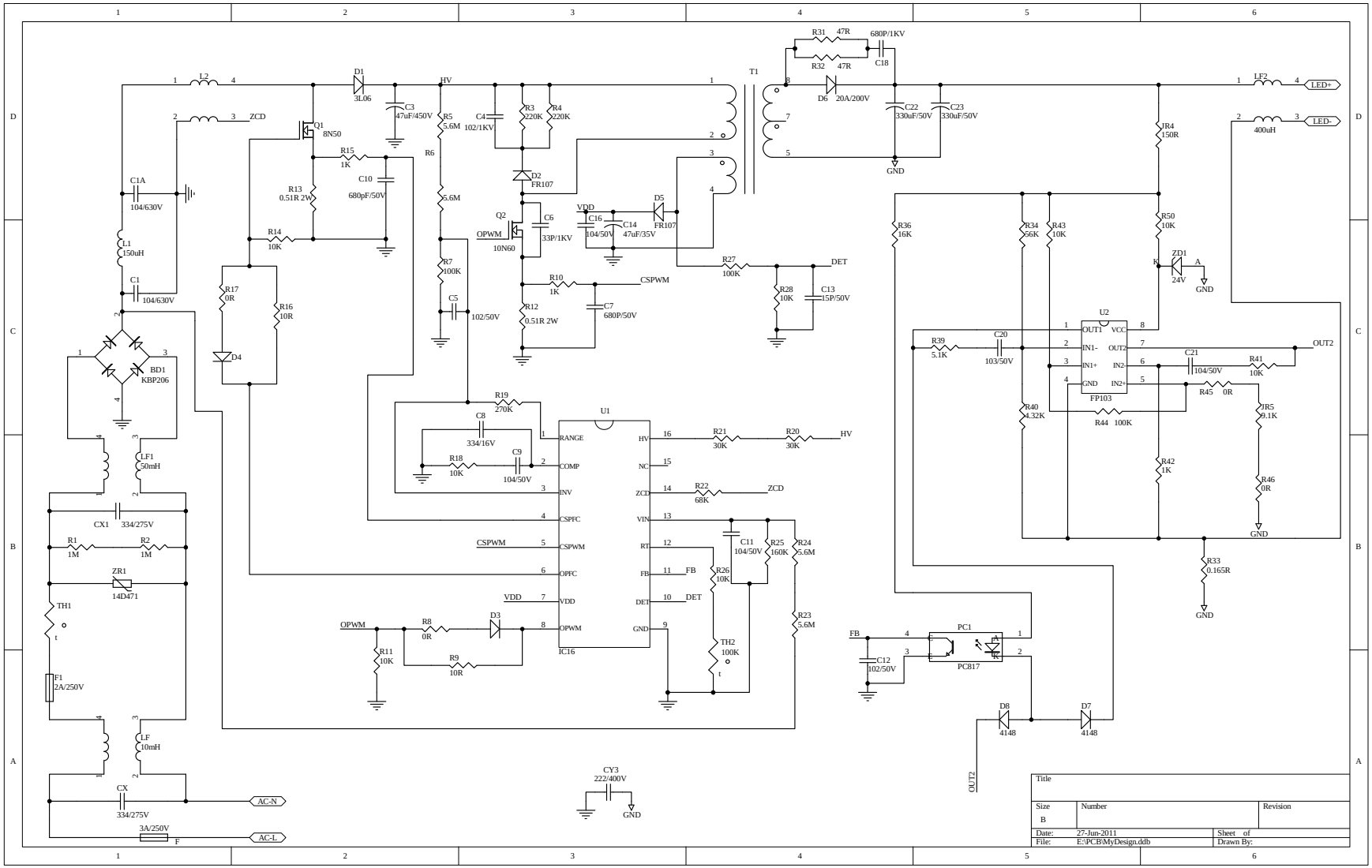
L2
ZCD
D1
3L06
HV
C3
47uF/450V
R5
5.6M
C4
102/1KV
R3
220K
R4
220K
R31
47R
680P/1KV
C18
R32
47R
T1
D6
20A/200V
C22
330uF/50V
C23
330uF/50V
GND
LF2
LED+
LED-
400uH
Q1
8N50
R15
1K
R6
C10
680pF/50V
R13
0.51R 2W
C1A
104/630V
L1
150uH
C1
104/630V
R14
10K
D2
FR107
Q2
10N60
OPWM
C6
33P/1KV
VDD
C16
104/50V
C14
47uF/35V
D5
FR107
R7
100K
C5
102/50V
R10
1K
CSPWM
R12
0.51R 2W
C7
680P/50V
R27
100K
DET
R28
10K
C13
15P/50V
R36
16K
R34
56K
R43
10K
R50
10K
IR4
150R
ZD1
24V
A
K
R17
0R
R16
10R
D4
BD1
KBP206
LF1
50mH
CX1
334/275V
R1
1M
R2
1M
ZR1
14D471
TH1
t
F1
2A/250V
LF
10mH
CX
334/275V
3A/250V
F
AC-N
AC-L
R19
270K
C8
334/16V
R18
10K
C9
104/50V
U1
RANGE
COMP
INV
CSPFC
CSPWM
OPFC
VDD
OPWM
IC16
HV
NC
ZCD
VIN
RT
FB
DET
GND
R21
30K
R20
30K
R22
68K
C11
104/50V
R25
160K
R24
5.6M
R26
10K
TH2
100K
R23
5.6M
R8
0R
D3
R11
10K
R9
10R
CY3
222/400V
U2
OUT1
IN1-
IN1+
GND
VCC
OUT2
IN2-
IN2+
FP103
R39
5.1K
C20
103/50V
C21
104/50V
R41
10K
R45
0R
R44
100K
R40
4.32K
R42
1K
IR5
9.1K
R46
0R
R33
0.165R
PC1
PC817
FB
C12
102/50V
D8
4148
D7
4148
OUT2
Title
Size
B
Number
Revision
Date:
27-Jun-2011
Sheet of
File:
E:\PCB\MyDesign.ddb
Drawn By: