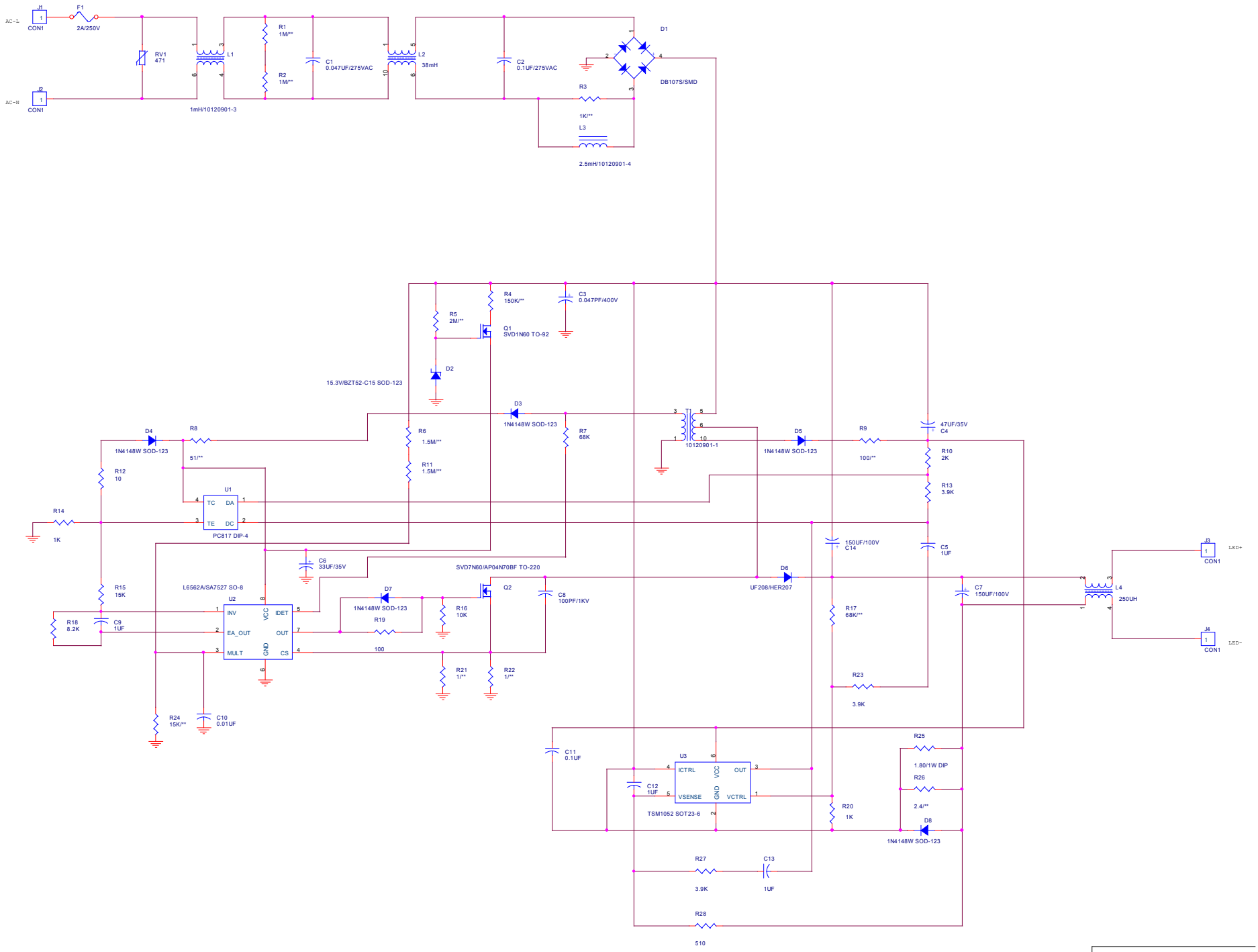

Title	T8_LED_18_8
Size C	Document Number <Doc>
Date: Saturday, January 01, 2011	Sheet